Setup - Operation

HFR™ for NVH Foam - Cart

3A2797G

EN

Hydraulic, Plural-Component, Fixed-Ratio Proportioner.
For dispensing NVH foam.

For professional use only. Not approved for use in explosive atmospheres or hazardous locations.

Important Safety Instructions
Read all warnings and instructions in this manual. Save these instructions.

See page 4 for model information and maximum working pressure.

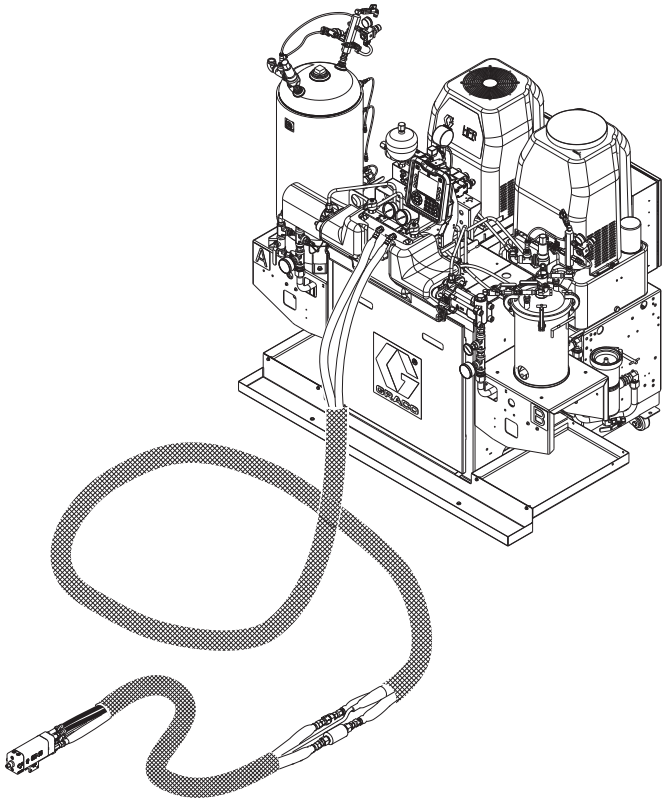

ti19507a

Patents Pending

PROVEN QUALITY. LEADING TECHNOLOGY.

Contents

Related Manuals 3
Models 4
Accessories 6
Applicator 6
GX-16 Orifices 6
B (Blue) and A (Red) Feed Tanks 6
AC Power Pack 6
Refill Kits 6
GX-16 Shutoff Valve Kit 6
Additional Accessories 7
Communications Gateway Module (CGM) 7
Bag Filter Kits 7
GX-16 Fitting Kits 7
Warnings 8
Important Two-Component Material Information 11
Isocyanate Conditions 11
Material Self-ignition 11
Keep Components A (Red) and B (Blue) Separate 11
Moisture Sensitivity of Isocyanates 11
Foam Resins with 245 fa Blowing Agents 11
Changing Materials 12
A (Red) and B (Blue) Components 12
Typical Installation 13
Component Identification 14
HFR Hydraulic Power Pack 17
Motor Control Module (MCM) 18
Advanced Display Module (ADM) 20
Fluid Control Module (FCM) 23
Temperature Control Module 24
Setup 28
Startup 43
Shutdown 44
Pressure Relief Procedure 44
Flushing 45
Maintenance 46
Install Upgrade Tokens 47
IsoGuard Select™ System 48
Troubleshooting 49
Light Tower (Optional) 49
Appendix A - ADM Icons Overview 52
Setup Screen Icons 52
Run Screen Icons 53
Appendix B - ADM Setup Screens Overview . . . 54
Appendix C - ADM Run Screens Overview 69
Appendix D - ADM Error Codes 75
Appendix E - System Events 87
Appendix F - USB Operation 89
Overview 89
USB Options 89
Download Log Files 89
Log Files, Folder Structure 90
Transfer System Settings 92
Update Custom Language 93
Technical Data 95
Motor Control Module Technical Data 96
Dimensions 97
Graco Standard Warranty 98
Graco Information 98

Related Manuals

Manuals are available at www.graco.com. Component manuals below are in English:

System Manuals	
313998	HFR Repair-Parts
Power Distribution Box Manual	
3A0239	Power Distribution Boxes Instructions-Parts
Pumpline Manuals	
3A0019	Z-Series Chemical Pumps Instructions-Parts
3A0020	HFR Hydraulic Actuator Instructions-Parts
Feed System Manuals	
3A0238	AC Hydraulic Power Pack Instructions-Parts
3A0235	Feed Supply Kits Instructions-Parts
3A0395	Stainless Steel Tank Feed Systems Instructions-Parts
3A1299	Carbon Steel Tank Feed Systems Instructions-Parts
3A0237	Heated Hoses and Applicator Kits, Instructions-Parts
308495	Viscon® Heater Kit Manual
Dispense Valve Manuals	
313536	GX-16, Operation
Accessory Manuals	
3A1149	HFR Discrete Gateway Module Kits Manual
312864	HFR Communications Gateway Module Instructions-Parts
3A1936	Agitator Kit Instructions-Parts
3A1962	Agitator Kit with Heat Blanket Instructions-Parts
3A1657	HFR Flow Meter Kits Instructions-Parts
332544	HFR for NVH Prepoly Refresh Kit Instructions-Parts

Models

System	Full Load Peak Amps Per Phase*	Voltage (phase)	Primary Heater Watts A (Red)	Primary Heater Watts B (Blue)	Max Flow Rate◆ lb/min (kg/min)	Approximate Output per Cycle (A+B) gal. (liter)	Hydraulic Pressure Ratio	Maximum Fluid Working Pressure ‡ psi (MPa, bar)
24N569	90	230V (3)	6,000	4,000	18 (8.2)	0.033 (0.125)	1.9:1	2000 (14, 138)
24N570 ★✖	68	400V (3)						
24N571	90	230V (3)			24 (11)	0.045 (0.170)	1.4:1	
24N572 ★✖	68	400V (3)						
24N573	90	230V (3)		6,000	17 (7.7)	0.032 (0.121)	3.7:1	
24N574 ★✖	68	400V (3)						
24N575	90	230V (3)		4,000	18 (8.2)	0.033 (0.125)	1.9:1	
24N576 ★✖	68	400V (3)						

System	Material Ratio (A:B)	A (Red) Pump Size	B (Blue) Pump Size	A (Red) Orifice	B (Blue) Orifice	25’ (7.6 m) Chemical Hose Bundle	10’ (3 m) Chemical Hose Bundle
24N569	24:1	120	5	.061	.011	24J290	24J316
24N570 ★							
24N571	16:1	160	10	.057	.014		
24N572 ★							
24N573	1:1	60	60	.039	.039	24N287	24N289
24N574 ★							
24N575	24:1	120	5	.085	.013	24K681	
24N576 ★							

System	27.5’ (8.4 m) Hydraulic Hose Bundle	10’ (3 m) Hydraulic Hose Bundle
24N569	24V197	24J177
24N570 ★		
24N571		
24N572 ★		
24N573		
24N574 ★		
24N575		
24N576 ★		

* *Full load amps with all devices operating at maximum capabilities. Fuse requirements at various flow rates and mix chamber sizes may be less.*

◆ *Flow rate is independent of frequency 50/60 Hz.*

★ CE *approved.*

‡ *The maximum fluid working pressure for the base machine without hoses is 3000 psi (20.7 MPa, 207 bar). If hoses rated at less than 3000 psi are installed, the system maximum fluid working pressure becomes the rating of the hoses. If 2000 psi hoses were purchased and installed by Graco, the working pressure for the machine is already setup for the lower 2000 psi (13.8 MPa, 138 bar) working pressure by Graco. If the machine was purchased without hoses and aftermarket hoses rated at or above 3000 psi are to be installed, see instruction manual 313998 for the procedure to setup the machine for higher rated hoses. The change in working pressure is made by changing a rotary switch setting in the Motor Control Module. The minimum pressure rating for hoses is 2000 psi. Do not install hoses with a pressure rating lower than 2000 psi.*

✖ *See **400 V Power Requirements**.*

400 V Power Requirements

- 400 V systems are intended for International voltage requirements. Not for voltage requirements in North America.
- If a 400 volt configuration is operated in North America, a special transformer rated for 400 V (“Y” configuration (4 wire)) may be required.
- North America mostly employs a 3 wire or Delta configuration. The two configurations are not interchangeable.

Accessories

Applicator

Part	Description
24J187	GX-16, 24:1, Straight, Machine Mount
24K233	GX-16, 24:1, Left, Machine Mount
24K234	GX-16, No Orifice, Left, Machine Mount
24E876	GX-16, No Orifice, Straight, Machine Mount
24E877	GX-16, 24:1, Right, Machine Mount
24E878	GX-16, No Orifice, Right, Machine Mount

GX-16 Orifices

Part	Description
257701	0.011 in. Orifice
257702	0.013 in. Orifice
24N158	0.014 in. Orifice
257703	0.016 in. Orifice
257704	0.018 in. Orifice
257705	0.020 in. Orifice
257706	0.022 in. Orifice
257707	0.023 in. Orifice
257708	0.024 in. Orifice
257709	0.025 in. Orifice
257710	0.026 in. Orifice
257711	0.028 in. Orifice
257712	0.029 in. Orifice
257713	0.032 in. Orifice
257714	0.035 in. Orifice
257715	0.036 in. Orifice
257716	0.038 in. Orifice
257717	0.039 in. Orifice
257718	0.040 in. Orifice
257719	0.042 in. Orifice
257720	0.043 in. Orifice
257721	0.044 in. Orifice
257722	0.049 in. Orifice
257723	0.052 in. Orifice
24N159	0.057 in. Orifice
257724	0.061 in. Orifice
24K682	0.085 in. Orifice

B (Blue) and A (Red) Feed Tanks

Part	Description
24N594	20 gal. (75 l) Stainless Steel Tank, No Agitation, Insulation, 3 Level Sensors, A-Side
24N595	20 gal. (75 l) Stainless Steel Tank, No Agitation, Insulation, 3 Level Sensors, B-Side
24N578	20 gal. (75 l) Carbon Steel Tank, No Agitation, 3 Level Sensors, A-Side
24N597	20 gal. (75 l) Carbon Steel Tank, No Agitation, 3 Level Sensors, B-Side
24N579	2 gal. (8 l) Stainless Steel Tank, No Agitation, 1 Level Sensor, B-Side

AC Power Pack

Part	Description
24J912	230V, AC Power Pack
24J913	400V, AC Power Pack
24E347	Hydraulic Power Pack Level Sensor Kit
24C872	Hydraulic Power Pack Pressure Gauge Kit
24E348	Hydraulic Power Pack Temperature Sensor
124217	Power Pack Accumulator Charging Kit

Refill Kits

Part	Description
24M418	Low Volume, 2 gal. (7.6 l) tank
24M419	High Volume, 20 gal. (76 l) tank

GX-16 Shutoff Valve Kit

Part	Description
24M596	GX-16 Shutoff Valve Kit For use with: 24N569, 24N570, 24N571, 24N572, 24N573, 24N574
24M368	GX-16 Shutoff Valve Kit For use with: 24N575, 24N576

GX-16 Proximity Kit

Part	Description
24K659	GX-16 Proximity Kit

Additional Accessories

Part	Description
24C871	Hydraulic Power Pack Hydraulic Tank Fluid Level Sensor
24C873	Hydraulic Power Pack Manifold Oil Temperature Sensor
24F516	IsoGuard Select fluid, 6 quarts
121728	Extension Cable for Advanced Display Module, 4 meter,
255468	Light Tower
255244	Foot Switch with Guard and 4 meter Cable
24G389	Pneumatic Agitator for 20 gal. (75 l) Carbon Steel Tank, No Heat
24K344	Pneumatic Agitator for 20 gal. (75 l) Carbon Steel Tank, Heat
24K348	Pneumatic Agitator for 20 gal. (75 l) Stainless Steel Tank, No Heat
24K346	Pneumatic Agitator for 20 gal. (75 l) Stainless Steel Tank, Heat
24K223	Isolated Pistol Grip Adapter
123694	Straight Gun Cover
123226	90° Gun Cover
123695	12 ft (3.7 m) Hose Cover
125236	Z-Series Pump Cover
125113	Gun Cover Handle Hole Cover
248280	3 oz. Quik Shot Grease Tube (10 Pack)
117792	3 oz. Grease Gun
0553-6	14 oz. Synthetic Grease Tube
255468	Light Tower Kit
24T182*	Flow Meter Kit, NVH Cart, 24:1 and 16:1
24T183*	Flow Meter Kit, NVH Cart, 1:1
24T180	PrePoly Refresh Kit, NVH Cart, with Autofill
24T181	PrePoly Refresh Kit, NVH Cart, without Autofill

* *Flow meter electronics kit, 24J318, is required for flow meter kit installation.*

Communications Gateway Module (CGM)

Part	Description
24J415	CGM Mounting Kit (Required for all applications)
CGMDN0	GCA Gateway Module, DeviceNet Fieldbus
CGMEP0	GCA Gateway Module, EtherNet/IP Fieldbus
CGMPB0	GCA Gateway Module, PROFIBUS Fieldbus
CGMPN0	GCA Gateway Module, PROFINET Fieldbus

Bag Filter Kits

Part	Description
24J312	High Volume Filter Kit (40 Mesh)
24P095	Low Volume Filter Kit (100 Mesh)
125147	40 Mesh Filter Replacement
125148	100 Mesh Filter Replacement
0135-4.30x.313	TEV O-Ring for Lid Seal
0131-4.30x.313	EP O-Ring for Lid Seal

GX-16 Fitting Kits

The following kit is for Models 24N575 and 24N576 only.

Part	Description
24N435	Gun Fitting Kit

The following kits are for all other Models.

Part	Description
24K672	Right Orientation, 90° Fitting Adapter Kit
24K674	Left Orientation, 90° Fitting Adapter Kit

Warnings

The following warnings are for the setup, use, grounding, maintenance, and repair of this equipment. The exclamation point symbol alerts you to a general warning and the hazard symbol refers to procedure-specific risk. Refer back to these warnings. Additional, product-specific warnings may be found throughout the body of this manual where applicable.

⚠ WARNING	
	ELECTRIC SHOCK HAZARD This equipment must be grounded. Improper grounding, setup, or usage of the system can cause electric shock. • Turn off and disconnect power at main switch before disconnecting any cables and before servicing equipment. • Connect only to grounded power source. • All electrical wiring must be done by a qualified electrician and comply with all local codes and regulations.
	TOXIC FLUID OR FUMES HAZARD Toxic fluids or fumes can cause serious injury or death if splashed in the eyes or on skin, inhaled, or swallowed. • Read MSDSs to know the specific hazards of the fluids you are using. • Store hazardous fluid in approved containers, and dispose of it according to applicable guidelines. • Always wear chemically impermeable gloves when spraying, dispensing, or cleaning equipment.
	PERSONAL PROTECTIVE EQUIPMENT You must wear appropriate protective equipment when operating, servicing, or when in the operating area of the equipment to help protect you from serious injury, including eye injury, hearing loss, inhalation of toxic fumes, and burns. This equipment includes but is not limited to: • Protective eyewear, and hearing protection. • Respirators, protective clothing, and gloves as recommended by the fluid and solvent manufacturer.
MPa/bar/PSI	**SKIN INJECTION HAZARD** High-pressure fluid from dispensing device, hose leaks, or ruptured components will pierce skin. This may look like just a cut, but it is a serious injury that can result in amputation. **Get immediate surgical treatment.** • Do not point dispensing device at anyone or at any part of the body. • Do not put your hand over the fluid outlet. • Do not stop or deflect leaks with your hand, body, glove, or rag. • Follow the **Pressure Relief Procedure** when you stop dispensing and before cleaning, checking, or servicing equipment. • Tighten all fluid connections before operating the equipment. • Check hoses and couplings daily. Replace worn or damaged parts immediately.

⚠ WARNING

FIRE AND EXPLOSION HAZARD

Flammable fumes, such as solvent and paint fumes, in **work area** can ignite or explode. To help prevent fire and explosion:

- Use equipment only in well ventilated area.
- Eliminate all ignition sources; such as pilot lights, cigarettes, portable electric lamps, and plastic drop cloths (potential static arc).
- Keep work area free of debris, including solvent, rags and gasoline.
- Do not plug or unplug power cords, or turn power or light switches on or off when flammable fumes are present.
- Ground all equipment in the work area. See **Grounding** instructions.
- Use only grounded hoses.
- Hold gun firmly to side of grounded pail when triggering into pail.
- If there is static sparking or you feel a shock, **stop operation immediately.** Do not use equipment until you identify and correct the problem.
- Keep a working fire extinguisher in the work area.

PRESSURIZED ALUMINUM PARTS HAZARD

Use of fluids that are incompatible with aluminum in pressurized equipment can cause serious chemical reaction and equipment rupture. Failure to follow this warning can result in death, serious injury, or property damage.

- Do not use 1,1,1-trichloroethane, methylene chloride, other halogenated hydrocarbon solvents or fluids containing such solvents.
- Many other fluids may contain chemicals that can react with aluminum. Contact your material supplier for compatibility.

PRESSURIZED EQUIPMENT HAZARD

Fluid from the gun/dispense valve, leaks, or ruptured components can splash in the eyes or on skin and cause serious injury.

- Follow the **Pressure Relief Procedure** when you stop spraying and before cleaning, checking, or servicing equipment.
- Tighten all fluid connections before operating the equipment.
- Check hoses, tubes, and couplings daily. Replace worn or damaged parts immediately.

⚠ WARNING

EQUIPMENT MISUSE HAZARD

Misuse can cause death or serious injury.

- Do not operate the unit when fatigued or under the influence of drugs or alcohol.
- Do not exceed the maximum working pressure or temperature rating of the lowest rated system component. See **Technical Data** in all equipment manuals.
- Use fluids and solvents that are compatible with equipment wetted parts. See **Technical Data** in all equipment manuals. Read fluid and solvent manufacturer's warnings. For complete information about your material, request MSDS from distributor or retailer.
- Do not leave the work area while equipment is energized or under pressure. Turn off all equipment and follow the **Pressure Relief Procedure** when equipment is not in use.
- Check equipment daily. Repair or replace worn or damaged parts immediately with genuine manufacturer's replacement parts only.
- Do not alter or modify equipment.
- Use equipment only for its intended purpose. Call your distributor for information.
- Route hoses and cables away from traffic areas, sharp edges, moving parts, and hot surfaces.
- Do not kink or over bend hoses or use hoses to pull equipment.
- Keep children and animals away from work area.
- Comply with all applicable safety regulations.

MOVING PARTS HAZARD

Moving parts can pinch, cut or amputate fingers and other body parts.

- Keep clear of moving parts.
- Do not operate equipment with protective guards or covers removed.
- Pressurized equipment can start without warning. Before checking, moving, or servicing equipment, follow the **Pressure Relief Procedure** and disconnect all power sources.

BURN HAZARD

Equipment surfaces and fluid that's heated can become very hot during operation. To avoid severe burns:

- Do not touch hot fluid or equipment.

Important Two-Component Material Information

Isocyanate Conditions

Spraying or dispensing materials containing isocyanates creates potentially harmful mists, vapors, and atomized particulates.

Read material manufacturer's warnings and material MSDS to know specific hazards and precautions related to isocyanates.

Prevent inhalation of isocyanate mists, vapors, and atomized particulates by providing sufficient ventilation in the work area. If sufficient ventilation is not available, a supplied-air respirator is required for everyone in the work area.

To prevent contact with isocyanates, appropriate personal protective equipment, including chemically impermeable gloves, boots, aprons, and goggles, is also required for everyone in the work area.

Material Self-ignition

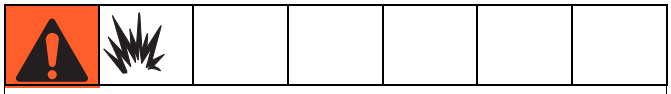

Some materials may become self-igniting if applied too thickly. Read material manufacturer's warnings and material MSDS.

Keep Components A (Red) and B (Blue) Separate

Cross-contamination can result in cured material in fluid lines which could cause serious injury or damage equipment. To prevent cross-contamination of the equipment's wetted parts, **never** interchange component A (Red) and component B (Blue) parts.

Moisture Sensitivity of Isocyanates

Isocyanates (ISO) are catalysts used in two component foam and polyurea coatings. ISO will react with moisture (such as humidity) to form small, hard, abrasive crystals, which become suspended in the fluid. Eventually a film will form on the surface and the ISO will begin to gel, increasing in viscosity. If used, this partially cured ISO will reduce performance and the life of all wetted parts.

NOTE: The amount of film formation and rate of crystallization varies depending on the blend of ISO, the humidity, and the temperature.

To prevent exposing ISO to moisture:

- Always use a sealed container with a desiccant dryer in the vent, or a nitrogen atmosphere. **Never** store ISO in an open container.
- Keep the ISO lube pump reservoir (if installed) filled with IsoGuard Select™, part 24F516. The lubricant creates a barrier between the ISO and the atmosphere.
- Use moisture-proof hoses specifically designed for ISO, such as those supplied with your system.
- Never use reclaimed solvents, which may contain moisture. Always keep solvent containers closed when not in use.
- Never use solvent on one side if it has been contaminated from the other side.
- Always lubricate threaded parts with ISO pump oil or grease when reassembling.

Foam Resins with 245 fa Blowing Agents

Some foam blowing agents will froth at temperatures above 90°F (33°C) when not under pressure, especially if agitated. To reduce frothing, minimize preheating in a circulation system.

Changing Materials

- When changing materials, flush the equipment multiple times to ensure it is thoroughly clean.
- Always clean the fluid inlet strainers after flushing.
- Check with your material manufacturer for chemical compatibility.
- Most materials use ISO on the A (Red) side, but some use ISO on the B (Blue) side. See the following section.

A (Red) and B (Blue) Components

IMPORTANT!

Material suppliers can vary in how they refer to plural component materials.

Be aware that when standing in front of the manifold on proportioner:

- Component A (Red) is on the left side.
- Component B (Blue) is on the right side.

For all machines:

- The A (Red) side is intended for ISO, hardeners, and catalysts.
- If one of the materials being used is moisture-sensitive, that material should always be in the A (Red) side.
- The B (Blue) side is intended for polyols, resins, and bases.

Typical Installation

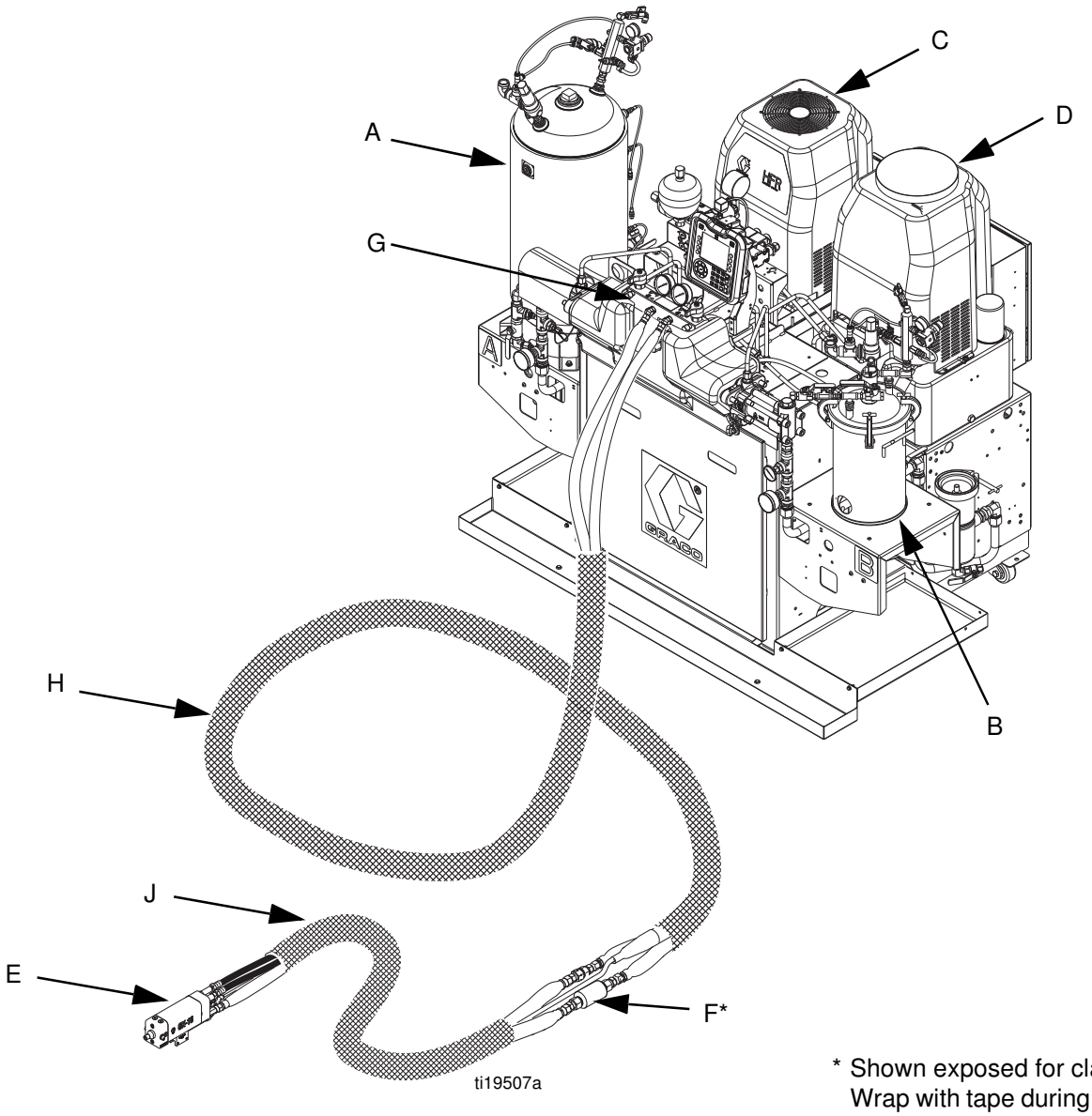

* Shown exposed for clarity.
Wrap with tape during operation.

FIG. 1: Typical Installation

Key:

A Tank Stand - A (Red)
B Tank Stand - B (Blue)
C AC Power Pack
D HFR Power Pack
E Dispense Gun
F Fluid Temperature Sensor (FTS)
G Manifold
H Main Hose Bundle
J Whip Hose Bundle

Component Identification

Key for FIG. 2 and FIG. 3.

AA Advanced Display Module (see page 20)
BA Component A (Red) Pressure Relief Outlet
BB Component B (Blue) Pressure Relief Outlet
FA Component A (Red) Fluid Manifold Inlet (on left side of manifold block)
FB Component B (Blue) Fluid Manifold Inlet
FM HFR Fluid Manifold
FP Feed Inlet Pressure Gauge
FT Feed Inlet Temperature Gauge
GA Component A (Red) Outlet Pressure Gauge
GB Component B (Blue) Outlet Pressure Gauge
HA Component A (Red) Hose Connection (from feed to gun or mix head)
HB Component B (Blue) Hose Connection (from feed to gun or mix head)
HP Hydraulic Power Pack Assembly
HT Hydraulic Tank
LS Pumpline Linear Sensor
MA Motor Control Module, see page 18
MP Main Power Switch
PA Component A (Red) Pump
PB Component B (Blue) Pump
PD Power Distribution Box
PHB Primary Heater - B Side
PHA Primary Heater - A Side
PI Primary Heater Fluid Inlet
PO Primary Heater Fluid Outlet
PR Primary Heater RTD
PS Primary Heater Overtemperature Switch
SA Component A (Red) PRESSURE RELIEF/DISPENSE Valve
SB Component B (Blue) PRESSURE RELIEF/DISPENSE Valve
TA Component A (Red) Pressure Transducer
TB Component B (Blue) Pressure Transducer
TC High Power Temperature Control Module (not shown, see page 24)

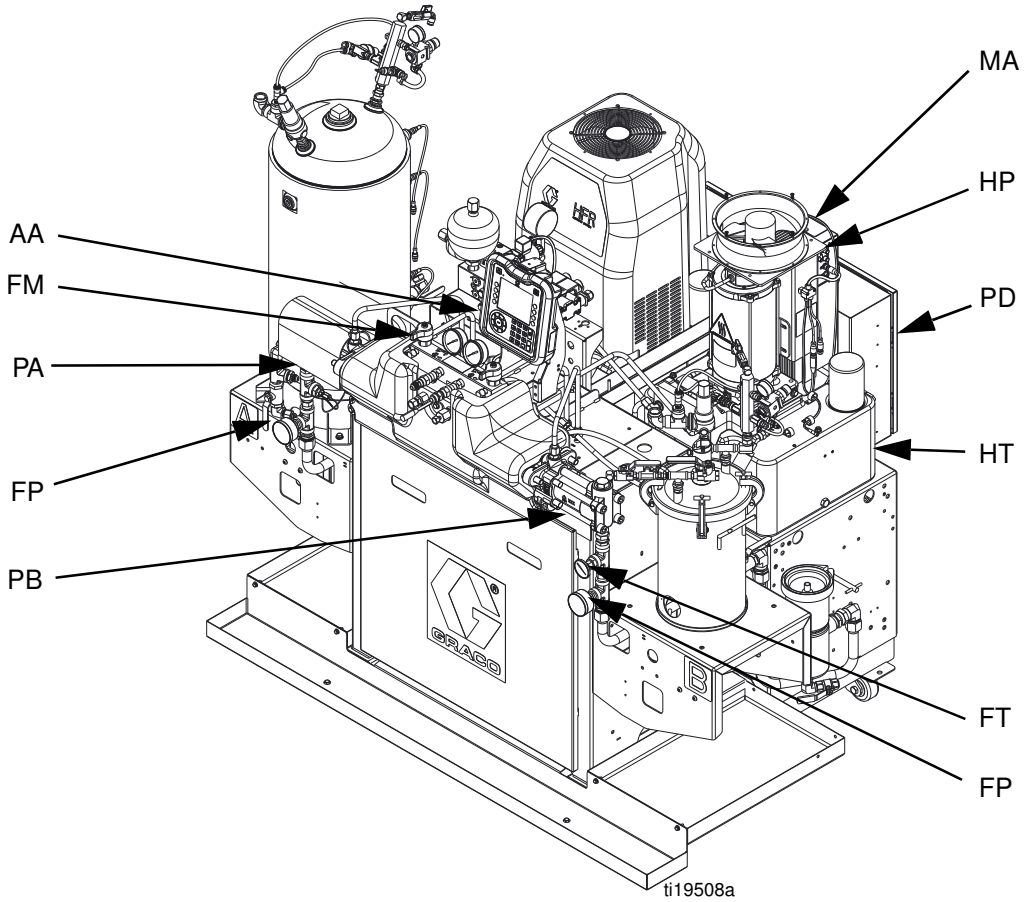

FIG. 2: Component Identification, Heated Model shown with shrouds removed

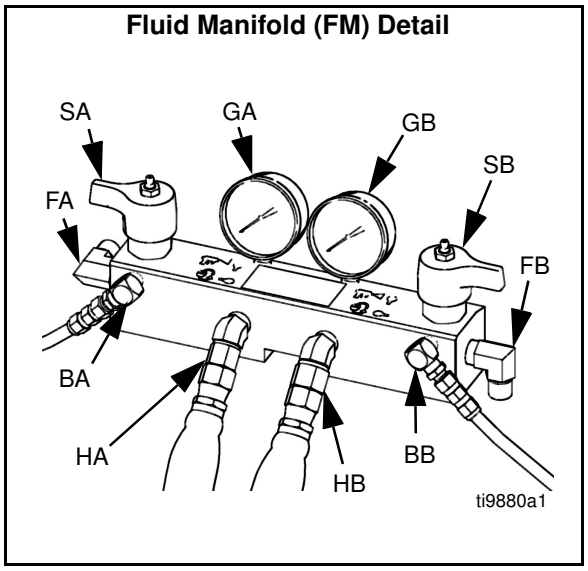

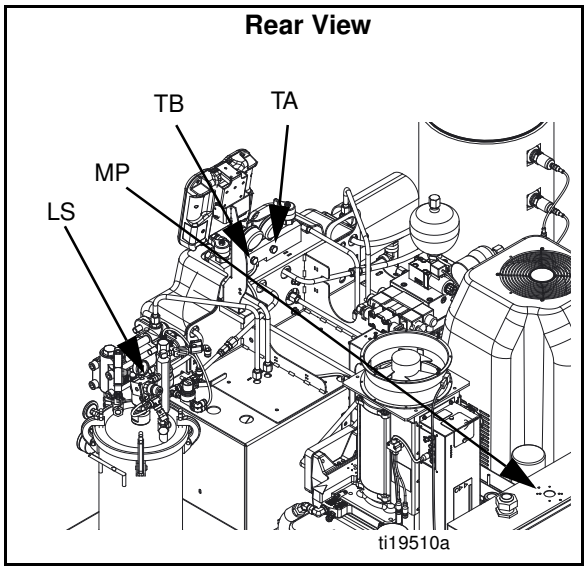

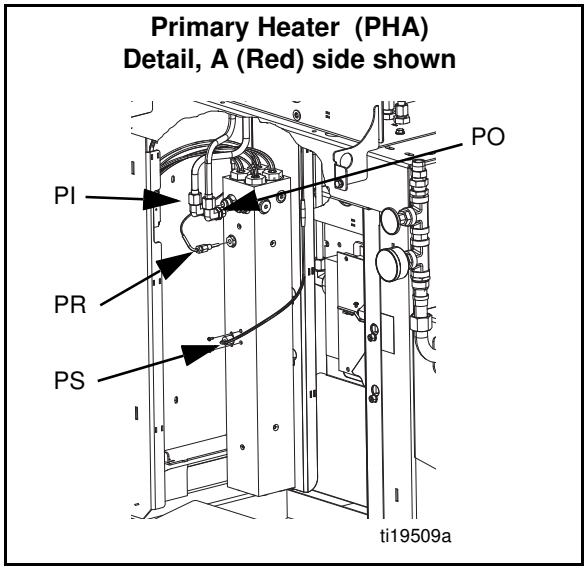

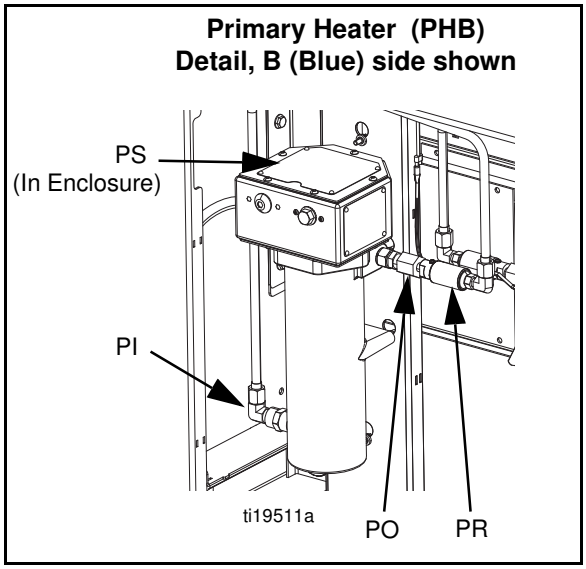

FIG. 3: Component Identification, Continued

Main Power Switch

Located on top of the power distribution box, see page 14. The main power switch turns power ON and OFF 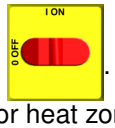 . The main power switch does not turn pumps or heat zones on.

Circuit Breakers

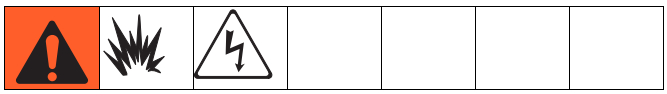

Most circuit breakers are located inside the power distribution box. The main block of circuit breakers in the power distribution box is shown below, with detailed information in the following table. For more information about items in the power distribution box, see power distribution box manual.

400V/ 3 phase

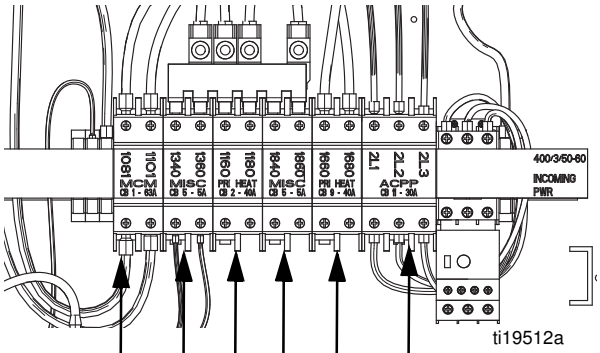

230V/ 3 phase

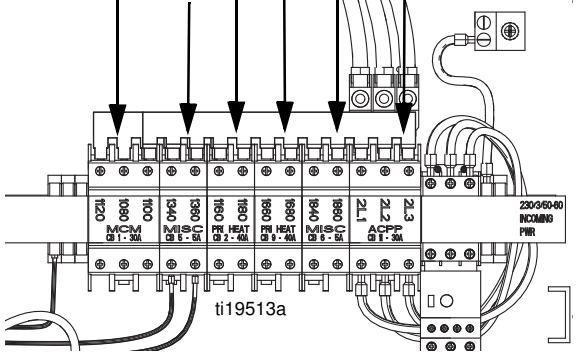

Ref.	Size		Component
	400V/ 3 phase	230V/ 3 phase	
CB1	63A	30A	Motor Control Module
CB2	40A	40A	Primary Heater A
CB5	5A	5A	Miscellaneous
CB6	5A	5A	Miscellaneous
CB9	40A	40A	Primary Heater B
CB11	30A	30A	AC Power Pack

HFR Hydraulic Power Pack

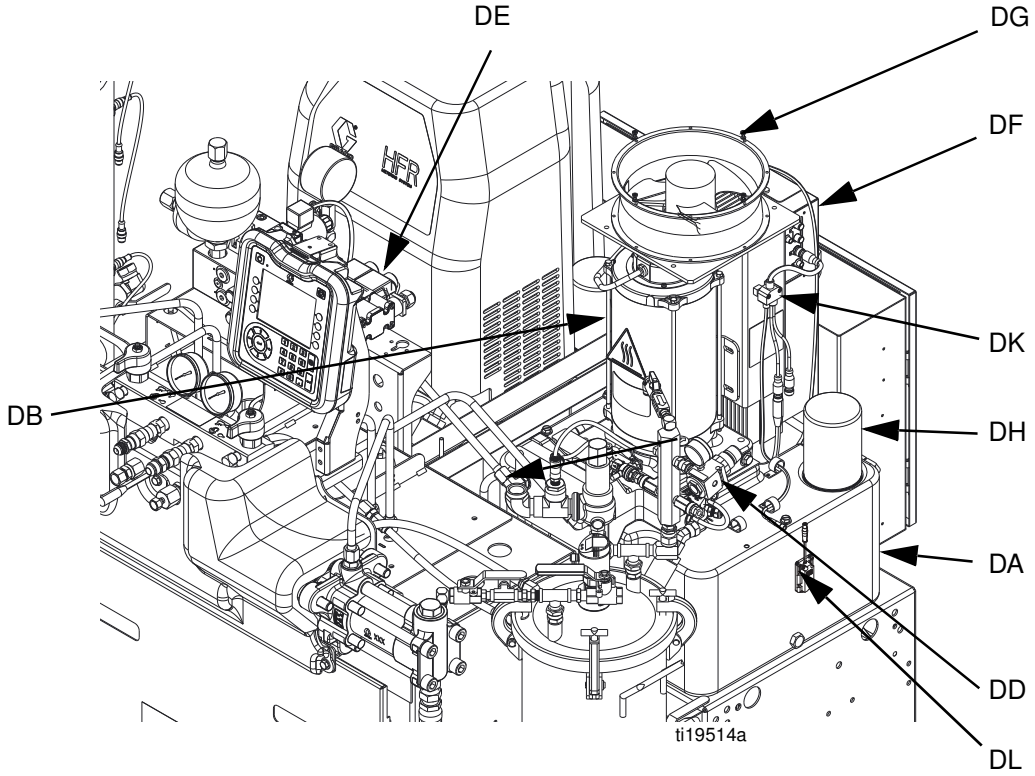

FIG. 4: HFR Hydraulic Power Pack

Key:

DA 9 Gallon Hydraulic Oil Reservoir (see **Technical Data** on page 95 for specifications)
DB Electric Motor
DD Hydraulic Housing
DE Directional Valve
DF Motor Control Module (see page 18)
DG Fan
DH Oil Filter
DJ Shroud (not shown, removed for clarity)
DK 3 Way Splitter
DL Oil Level Sensor (Optional)

Motor Control Module (MCM)

NOTICE

If the Motor Control Module is replaced, the selector switch must be set prior to initial startup of the Motor Control Module or damage may occur. See HFR Repair manual for details, see **Related Manuals** on page 3.

For MCM location, see reference MA in FIG. 2 on page 14. When installed, the end of the MCM with the power input connection (12) faces down and the end with the access cover (A) faces up.

The Motor Control Module uses an 8-position selector switch to set the system maximum working pressure.

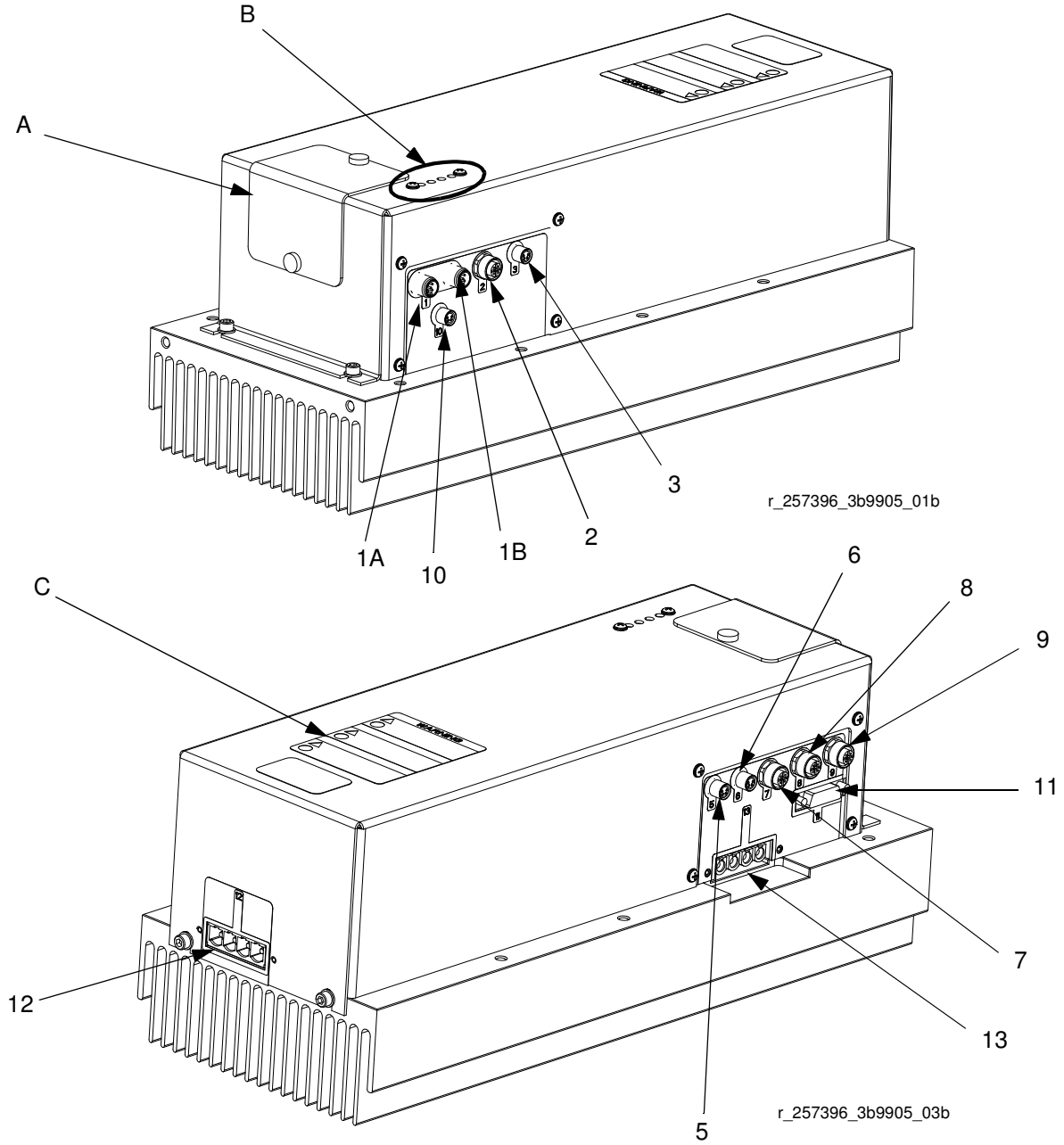

FIG. 5: MCM Component Identification

Ref	Description
A	Access Cover
B	LEDs
C	Warning Label
1A, 1B	CAN Connections
2	Three-way Splitter to: Oil Low Level Sensor, Dispense Valve Solenoid, and Footswitch
3	Oil Temperature Sensor
5	Electric Motor Temperature Sensor
6	LVDT (Position Sensor)
7	Three-way Splitter to: Hydraulic Directional Valve, Oil Overtemperature Switch
8	Pressure Transducer B (Blue) side
9	Pressure Transducer A (Red) side
10	Not used
11	Motor Position Sensor
12	MCM Power Input Connection
13	Motor Power Connection

Diagnostic Information

Table 1: LED (Ref B) Status Signal

Module Status LED Signal	Description
Green on	System is powered up.
Yellow on	Internal communication in progress.
Red solid	MCM hardware failure. Replace MCM.
Red flashing fast	Uploading software.
Red flashing slow	Token error. Remove token and upload software token again.

Advanced Display Module (ADM)

User Interface

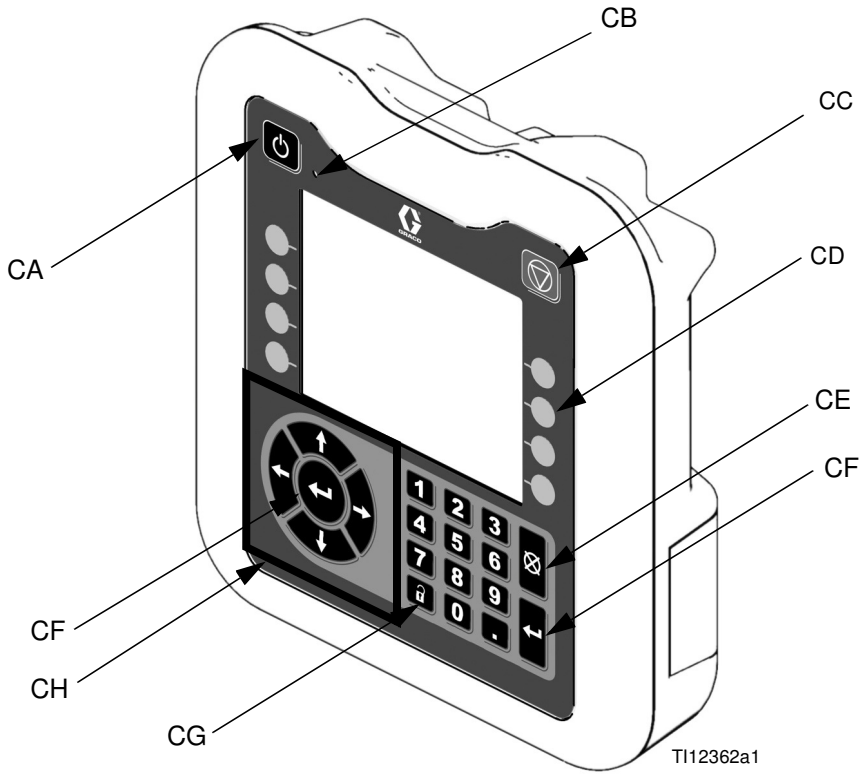

FIG. 6: ADM Component Identification - Front

Buttons

Ref.	Button	Function
CA	System enable/ disable	Enables/disables system. When system is disabled, temperature control and dispense operation are disabled.
CB	System Status Indicator Light	Displays system status. See **System Status Indicator (CB) Conditions** on page 20 for details.
CC	Stop	Stop all system processes.
CD	Soft Keys	Defined by application using ADM.
CE	Cancel	Cancel a selection or number entry while in the process of entering a number or making a selection.
CF	Enter	Acknowledge changing a value or making a selection.
CG	Setup	Toggle between run and setup screens or password screen if setup screens are password protected.
CH	Navigation	Navigate within a screen or to a new screen.

System Status Indicator (CB) Conditions

Green Solid - Run Mode, System On
Green Flashing - Setup Mode, System On
Yellow Solid - Run Mode, System Off

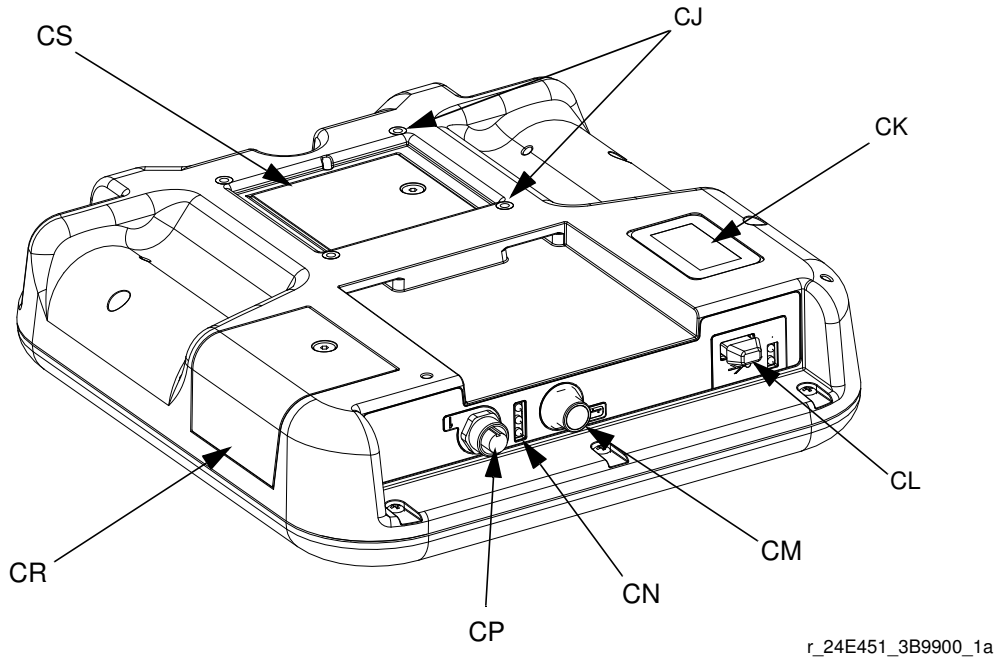

FIG. 7: ADM Component Identification - Rear

Key:

CJ Flat Panel Mount
CK Model Number
CL USB Module Interface
CM CAN Cable Connections
CN Module Status LEDs
CP Accessory Cable Connections
CR Token Access Cover
CS Battery Access Cover

ADM Module Status LEDs (CN) Conditions

Module Status LED Signal	Description
Green on	System is powered up.
Yellow on	Communication in progress.
Red solid	ADM hardware failure.
Red flashing fast	Uploading software.
Red flashing slow	Token error. Remove token and upload software token again.

USB Module Status LEDs (CL) Conditions

Module Status LED Signal	Description
Green flashing	System is powered up.
Yellow on	Downloading information to USB
Green/Yellow Flashing	ADM is busy, USB cannot transfer information when in this mode

Main Display Components

The following figure calls out the navigational, status, and general informational components of each screen. For details regarding the user interface display see **Shutdown**, page 44.

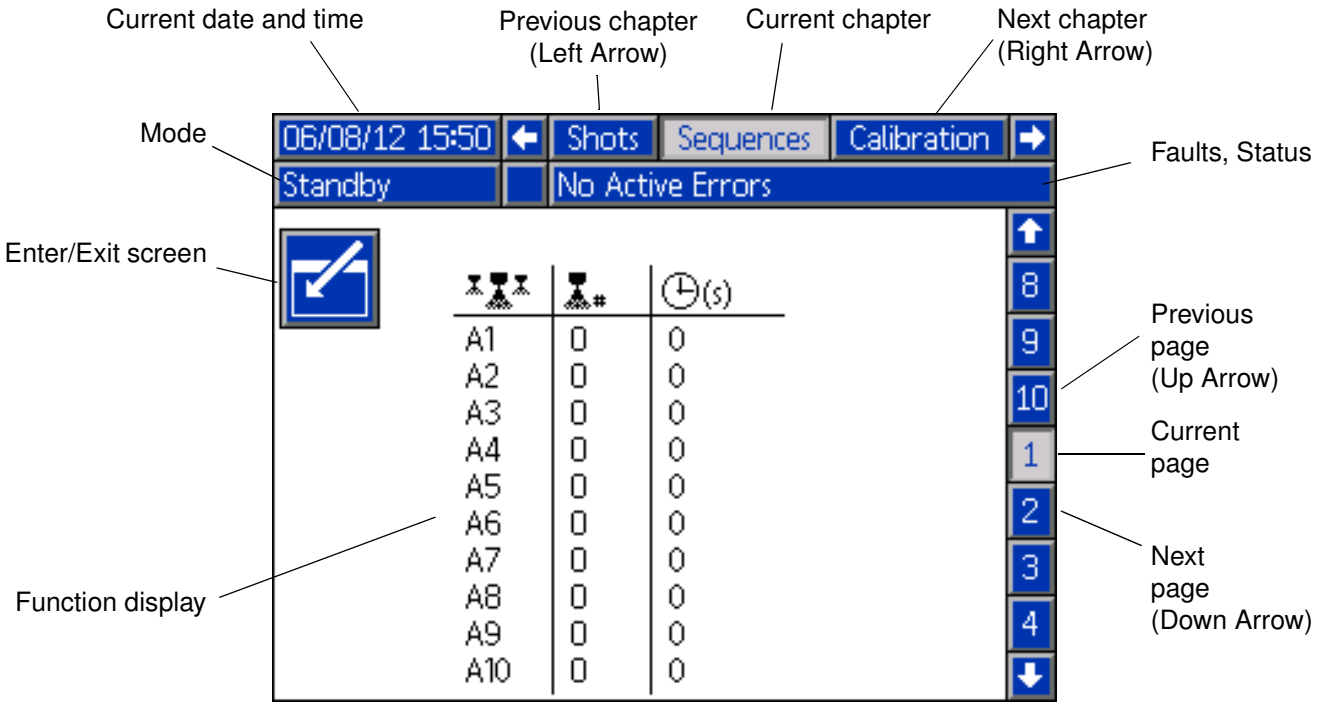

FIG. 8: Main Display Components

Fluid Control Module (FCM)

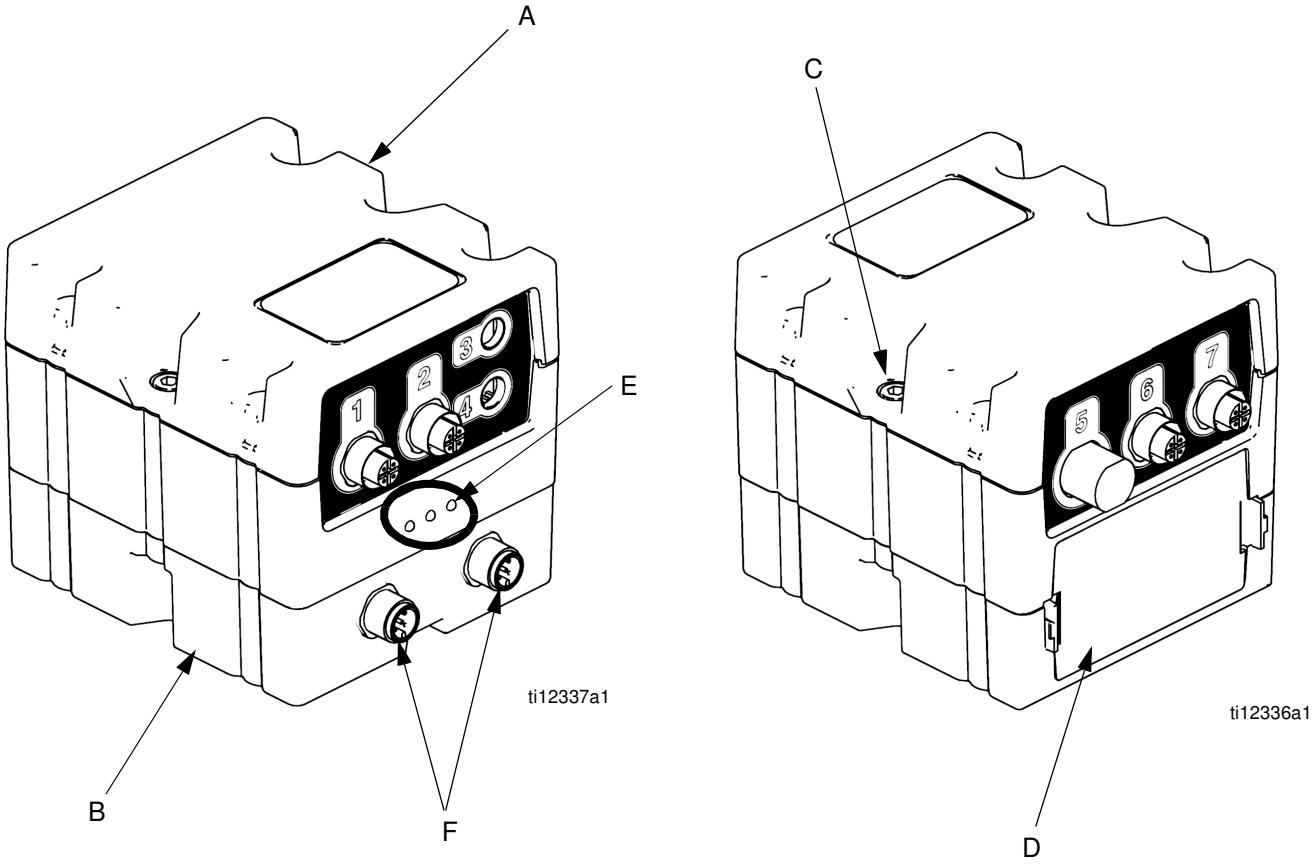

FIG. 9: Fluid Control Module (FCM)

Key:

A Fluid Control Module
B Base
C Module Connection Screws
D Access Cover
E Module Status LEDs
F CAN Connectors

Diagnostic Information

Module Status LED (Ref E) Signal	Diagnosis
Green on	System is powered up
Yellow	Internal communication in progress
Red solid	FCM hardware failure. Replace FCM.
Red flashing fast	Uploading software.
Red flashing slow	Token error. Remove token and upload software token again.

Temperature Control Module

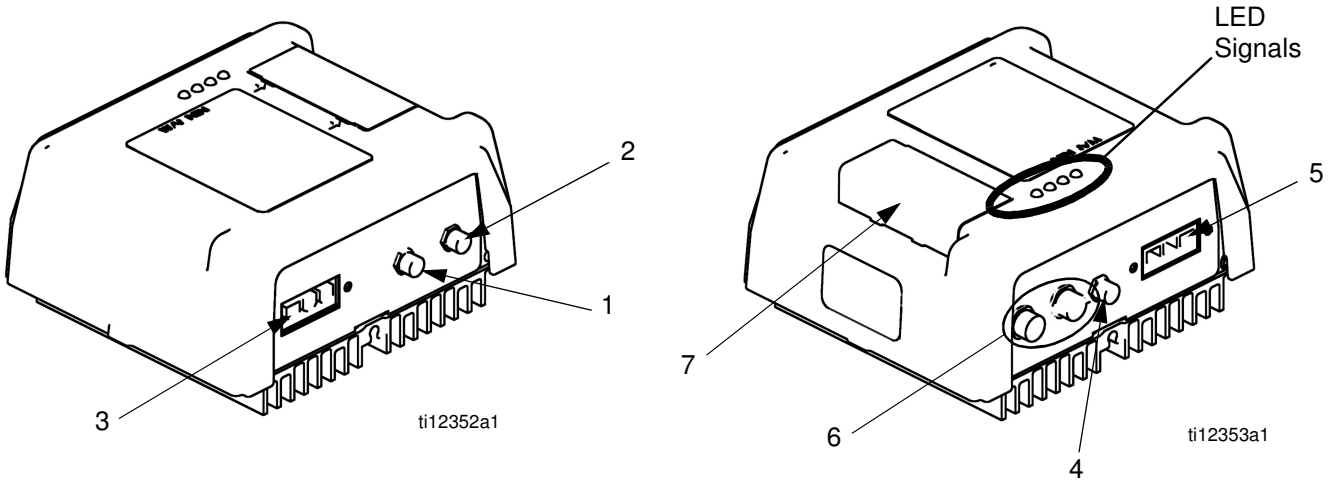

FIG. 10: High Power Temperature Control Module Sensor Connections

Key:

1 Overtemperature Switch Connection (primary heaters only)
2 RTD Temperature Sensor Connection
3 Output Power Connection
4 DC Output Connection
5 Input Power Connection
6 CAN Connections
7 Rotary Selector Switch, Token Access

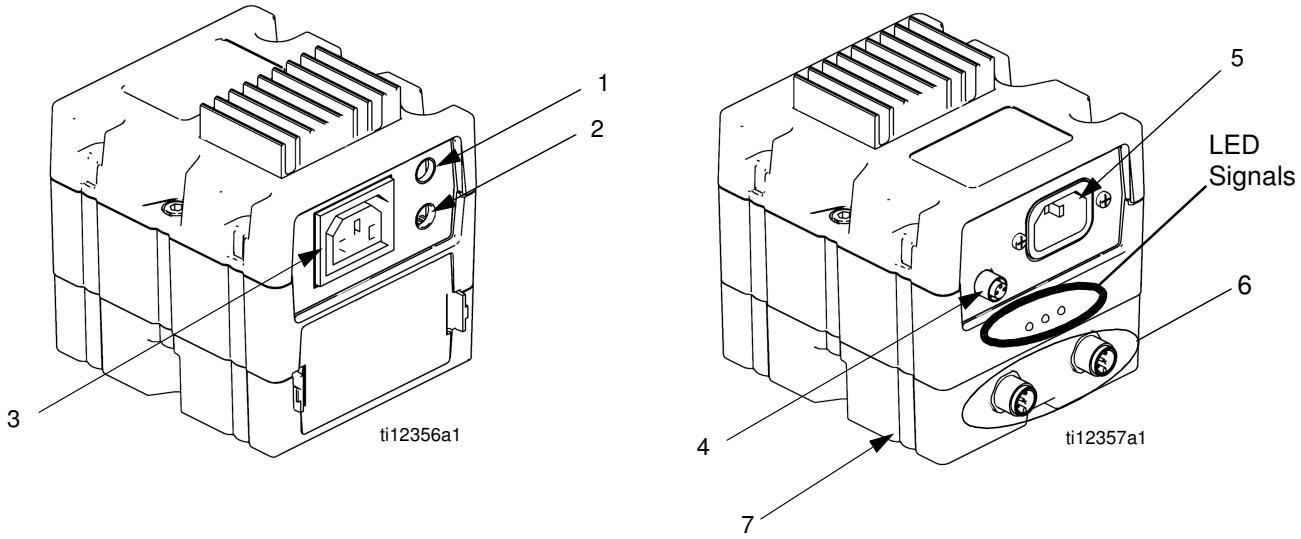

FIG. 11: Low Power Temperature Control Module Cable Connections

1 Overtemperature Switch Connection
2 RTD Temperature Sensor Connection
3 Output Power Connection
4 DC Output Connection
5 Input Power Connection
6 CAN Connections
7 Base

Temperature Control Module Diagnostic Information

Module Status LEDs

Signal	Description
Green on	Temperature control module is powered up.
Yellow on	Internal communication in progress.
Red solid	Temperature control module failure. See Troubleshooting table.
Red flashing fast	Uploading software.
Red flashing slow	Token error. Remove token and upload software token again.
Blue light off (High Power Module only)	Temperature control module is off. See Troubleshooting table.
Blue flashing (High Power Module only)	Length of flashes indicates amount of power running through temperature control module.

Heat Control Zone Selection

The HFR unit supports four independent temperature control zones and two independent temperature monitoring zones. The high power temperature control modules are located inside the frame below the hydraulic power pack.

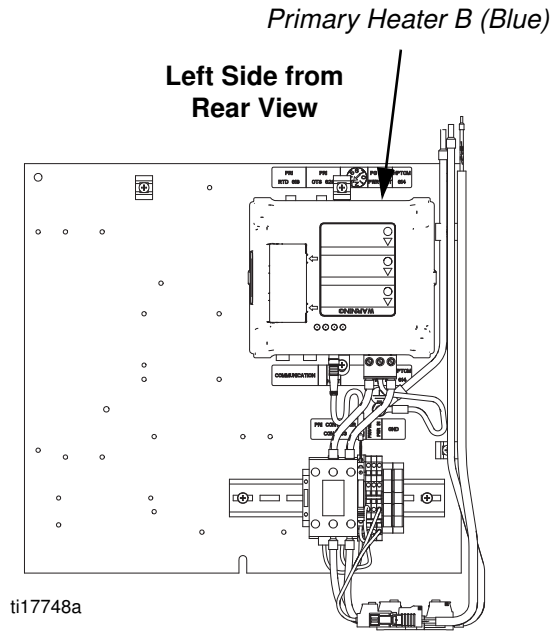

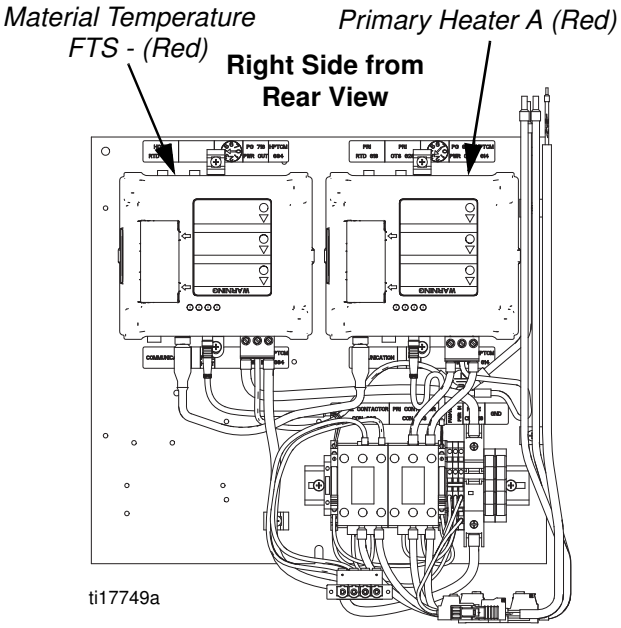

Adjust Rotary Switch

The rotary switch setting indicates which zone the temperature control module will control in the system. The high power module uses an 8-position rotary switch. The low power module uses a 16-position rotary switch.

Set the rotary switch (S) to the specific selection according to the settings listed in the following tables.

High Power Module Rotary Switch Location

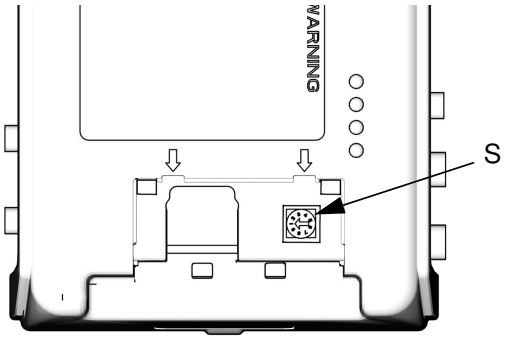

ti12360a

Low Power Module Rotary Switch Location

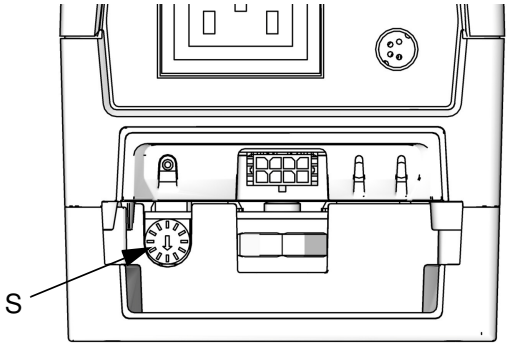

ti12361a

FIG. 12: Rotary Switch

High Power Module Rotary Switch Settings

Setting	Zone
0	Not Used
1	B (Blue) Primary Heat
2	B (Blue) Hose Heat
3	A (Red) Primary Heat
4	A (Red) Hose Heat
5 through 7	Not Used

Low Power Module Rotary Switch Settings

Setting	Zone
0 through 4	Not Used
5	B (Blue) Tank Heater
6	A (Red) Tank Heater
7	B (Blue) Chiller
8	A (Red) Chiller
9 through F	Not Used

Setup

Perform this setup procedure to secure all necessary machine connections for machine operation.

1. Locate system.

a. Locate system on a level surface. See **Dimensions** on page 97 for space requirements.

b. Do not expose system to rain.

2. Electrical requirements. See Models on page 4 for detailed electrical requirements information.

Installing this equipment requires access to parts which may cause electric shock or other serious injury if work is not performed properly. Have a qualified electrician connect power and ground to main power switch terminals, see step 4 in this setup procedure. All electrical wiring must be done by a qualified electrician and comply with all local codes and regulations.

3. Ground system

This equipment must be grounded.

a. *System:* grounded through power cord. See step 4 on page 28.

b. *Fluid supply containers*: follow your local code.

c. *Object being dispensed into*: follow your local code.

d. *Solvent pails used when flushing*: follow your local code. Use only metal pails, which are conductive, placed on a grounded surface. Do not place pail on a nonconductive surface, such as paper or cardboard, which interrupts grounding continuity.

e. *To maintain grounding continuity when flushing or relieving pressure,* hold a metal part of dispense gun firmly to the side of a grounded *metal* pail, then trigger gun.

4. Connect electrical cord to system.

NOTE: See **Power Line Voltage Surges** information on page 29.

NOTE: Power cord is not supplied. See the following table.

Table 2: Power Cord Requirements

Model	Cord Requirements AWG (mm^2)
Heated system, 230V, 3 phase	4 (21.2), 3 wire + ground
Heated system, 400V, 3 phase	4 (21.2), 4 wire + ground †

† *Residual Current Device (RCD) must be rated at 300 mA if installed.*

Electrical Cord Wires by Model
230V, 3 phase: L1, L2, L3, GND
400V, 3 phase: L1, L2, L3, N, GND

Use 5/32 or 4 mm hex allen wrench to connect the three power leads to L1, L2, L3, and Neutral (as required). Connect green to ground (GND).

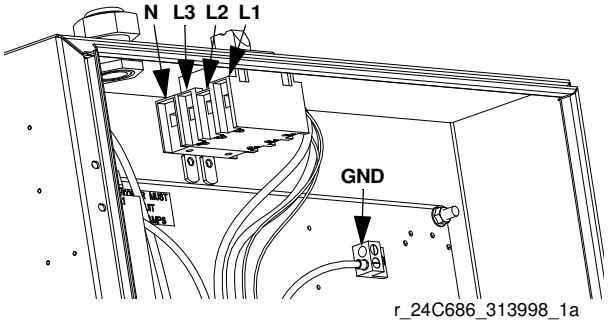

FIG. 13: 400V, 3 phase shown

Power Line Voltage Surges

Power conversion equipment can be sensitive to voltage fluctuations on incoming power. The Motor Control Module falls under the category of power conversion equipment because energy is stored on a capacitive bus and then modulated to control a brushless motor. Engineered design takes this into account and withstands a wide range of conditions, but it is possible for supplied power to occasionally fall outside the tolerable range in industrial plants with high-amperage reactive pulsed loads such as welding equipment. If the tolerable range is exceeded, an overvoltage condition is flagged and the system will shut down in an alarm state to protect itself and alert the user of unstable power. Excessive or repeated overvoltage may permanently damage hardware.

The MAX-HOLD feature on a multimeter can be used to determine peak DC voltage on the line. DC is the proper setting, as opposed to AC, because peak voltage is the critical parameter that affects the DC voltage level stored on the capacitive bus in power conversion equipment. Reading should not regularly exceed approximately 400VDC to avoid tripping the 420VDC alarm level in the Motor Control Module. If power quality is suspect, power conditioning or isolation of the device(s) causing poor power quality is recommended. Consult a qualified electrician if there are any concerns about the available power supply.

Power Line Test Steps with Multimeter

a. Set multimeter to “DC voltage”.

b. Connect multimeter probes to supplied power line.

c. Press “Min Max” successively to show the peak positive and negative DC voltages.

d. Confirm readings do not exceed 400VDC (Motor Control Module alarm issued at 420VDC).

The chart below shows the permissible magnitude and duration of temporary over-voltage events:

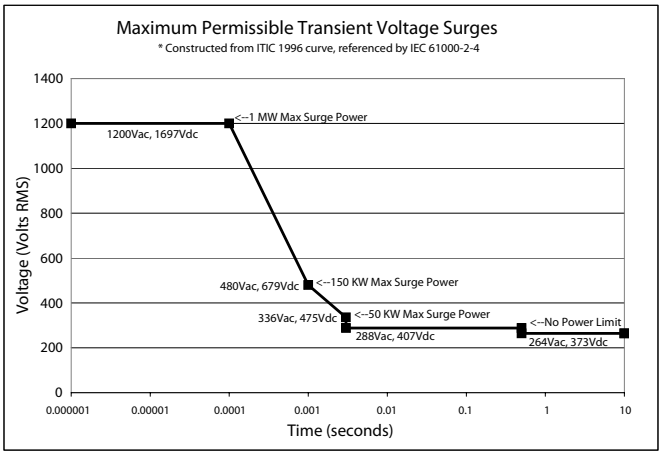

5. Connect HFR Proximity Cables to the GX-16.

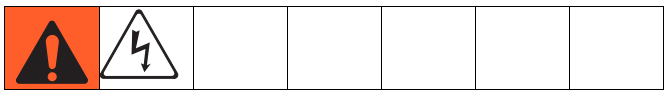

NOTE: Refer to the HFR and GX-16 manuals for more details for the following procedures.

NOTE: The cable is indicated by a green stripe.

a. Connect the GX-16 proximity sensor to the proximity cable.

b. Connect the 10 ft (3 m) hydraulic whip hose cable to the 25 ft (7.6 m) chemical hose cable.

c. Connect the other end of the cable to the electrical connector found near the fluid manifold on the HFR.

NOTE: The electrical connector will be indicated by a green stripe and labeled “PG-MPO”.

6. Connect Hydraulic Lines to the system.

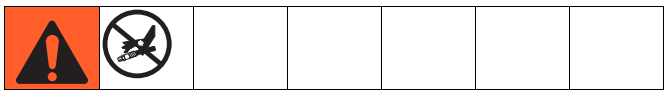

NOTICE

Damage can occur to the directional valve if the hydraulic hose diameter is larger than 3/8 in. (9.5 mm).

To prevent damage to the applicator or directional valves, do not allow any dirt or foreign matter to enter the lines, when connecting the hose kit to the applicator and hydraulic power pack.

a. Connect the hydraulic hose to the hydraulic hose fittings (A2 and B2) on the AC power pack.

Hydraulic Hose Fitting	Hydraulic Hoses	Hydraulic Hose Color Markings
A2	Material close	Green
B2	Material open	Green/White

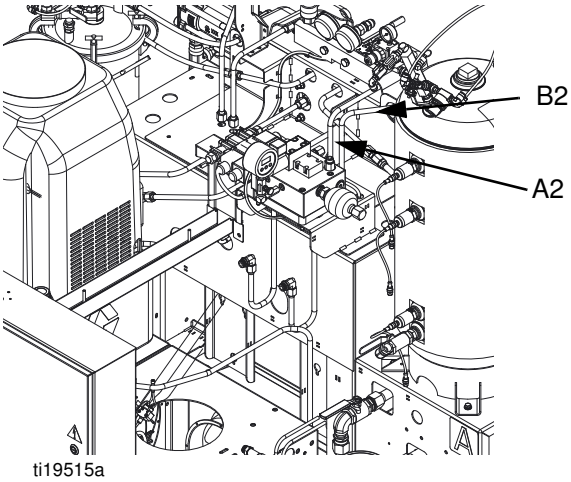

FIG. 14: Hydraulic Fittings on Hydraulic Housing

b. Hand tighten each fitting.

c. Tighten each fitting 1/4 turn past hand tight.

7. Install GX-16 Fitting Adapter Kit (Models 24N575 and 24N576 Only).

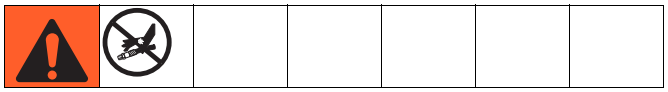

a. Remove the chemical fittings from the back of the GX-16.

b. Install JIC #4 fitting assembly into the B Supply port.

c. Install JIC #6 fitting assembly into the B Return port.

d. Install JIC #8 fitting assembly into both A Supply and A Return ports.

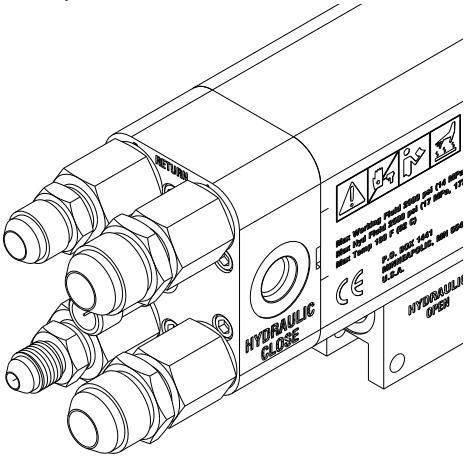

8. Install Flow Meter Kit (Optional).

Refer to HFR Flow Meter Kits, Instruction-Parts manual for installation and setup instructions.

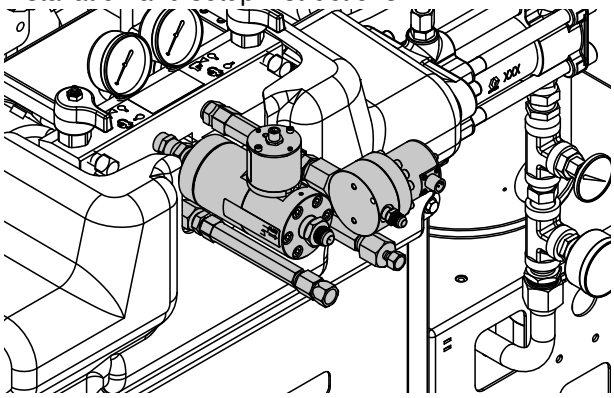

9. Install PrePoly Refresh Kit (Optional).

Refer to HFR for NVH Prepoly Refresh Kit, Instructions-Parts for installation and setup instructions.

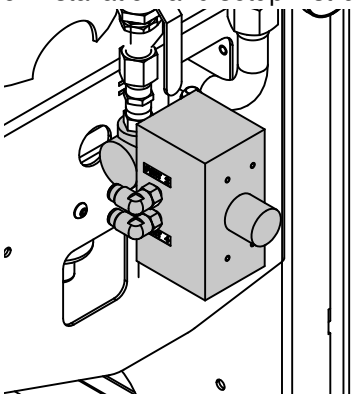

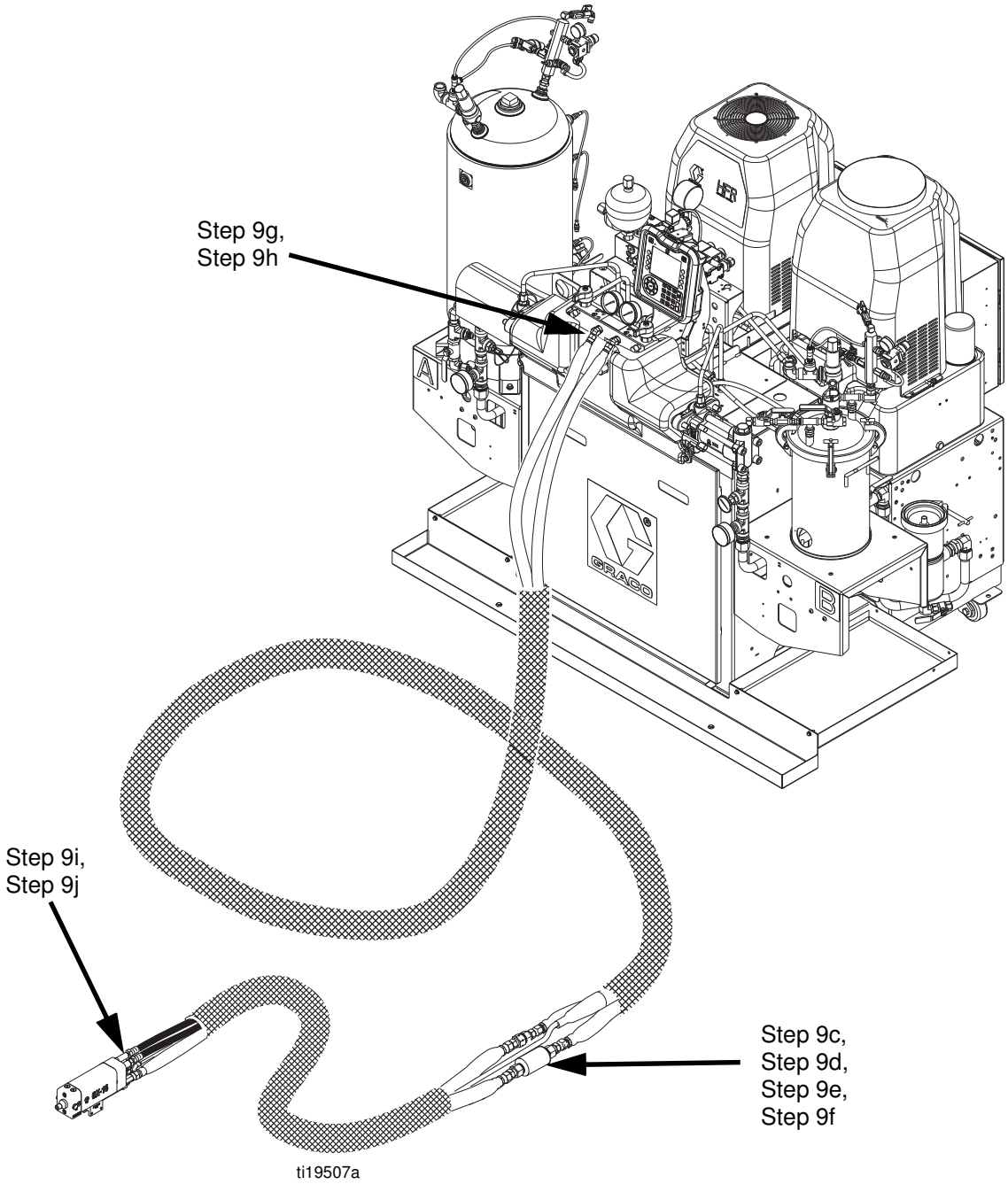

FIG. 15: Material Hose Connections

10. Connect Material Hoses

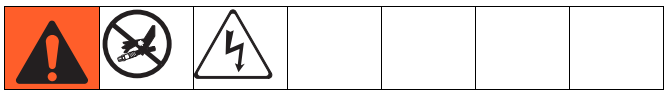

NOTICE

Avoid routing hoses in walkway areas to prevent operators from tripping on hoses running between system components. This also prevents fittings from leaking.

NOTE: Refer to **FIG. 15** on page 32 for visual clarity of the following steps.

a. Ensure main power is OFF 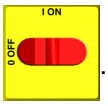

.

b. Ensure A (Red) and B (Blue) inlet valves on the HFR and the material supply ball valves on the tanks are closed.

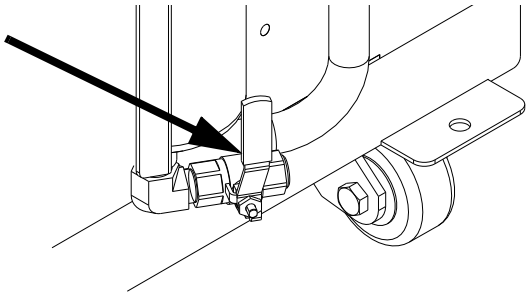

c. Remove reducer fitting from the A (Red) connection of the HFR fluid manifold. Install FTS in the A (Red) material supply line between main hose and whip hose. Ensure the FTS is facing toward the fluid flow of material after installation. See Heated Hose manual for instructions. Refer to FIG. 15 and FIG. 16.

d. Remove reducer fitting from B (Blue) connection of the HFR fluid manifold (Models 24N573, 24N574 only). Install the provided additional spacers near the location of the FTS for the remaining material lines. Refer to FIG. 15 and FIG. 16.

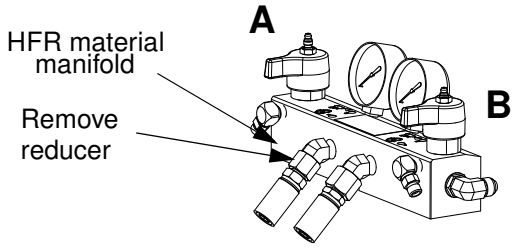

FIG. 16: Material Manifold

e. Install ball valves (optional) between main hose and whip hose. Connect the main hose bundle to the whip hose bundle.

NOTE: The ball valve kit is designed to fit in one orientation only.

NOTICE

If using the ball valve kit, ensure the FTS does not go through the ball valve. Failure to do so will result in damage to the FTS and the inability to close the ball valve.

f. Assemble the hydraulic hose sections together and place the assembled hose connection near the FTS area. Refer to FIG. 15.

g. Connect A (Red) and B (Blue) hoses to A (Red) and B (Blue) outlets on HFR fluid manifold (FM). Hoses are color coded: solid red for component A, solid blue for component B.

h. Connect cables (Y). Be sure cables have slack when hose bends. Wrap cable and electrical connections with electrical tape. See Heated Hose manual for heated hose connection details and illustrations for the various types of heated hoses.

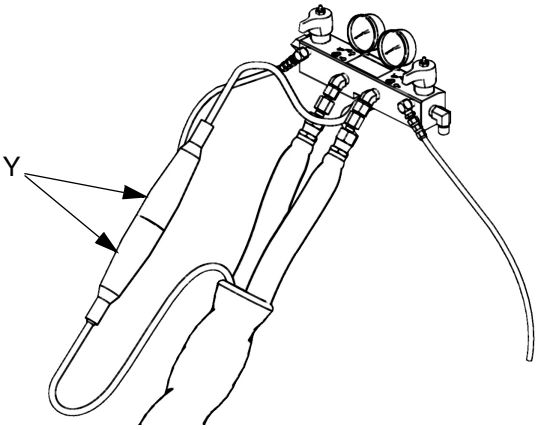

i. Connect the other end of the supply hoses (solid color) to the applicator. See the applicator manual for fluid inlet identification.

j. Connect A (Red) and B (Blue) return hoses (solid with white stripe) to the applicator. See the applicator manual for fluid outlet identification.

NOTE: The other end of the return hose will be connected in step n on page 39.

11. Connect GX-16 Hydraulic Lines

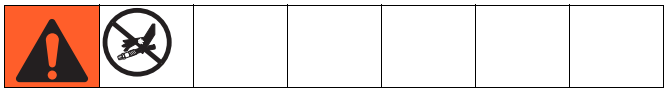

a. Navigate to the System Screen 2 and set the mode to run as straight head: prox dispense valve.

Trapped air can cause the pump to cycle unexpectedly, which could result in serious injury from splashing or moving parts.

b. Verify the mixhead hydraulic power pack is not active by verifying the gauge is at 0.

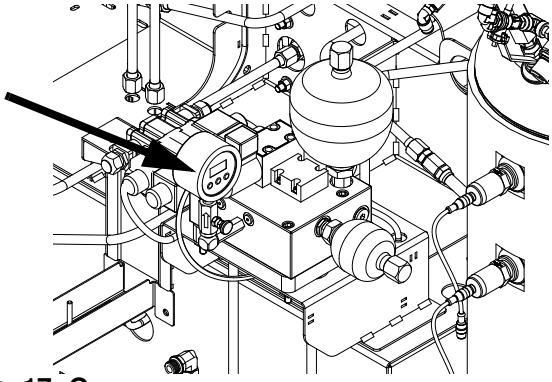

FIG. 17: Gauge

c. Check the hydraulic fluid level. See **Technical Data** on page 95 for specifications.

d. Use the supplied 7/16 in. JIC male-male adapter at the gun end to connect hoses

together. This creates a hydraulic fluid circulation loop.

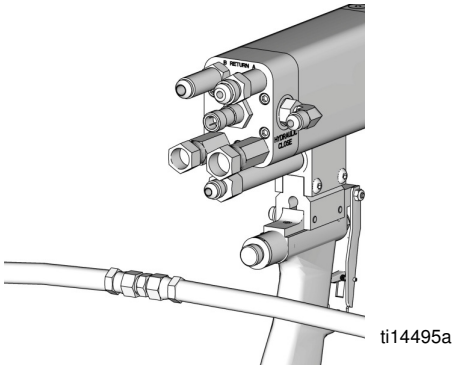

FIG. 18: Hydraulic Loop

e. Turn on the power pack by navigating to the Home Screen, Standby Mode and press . Circulate oil for 3 minutes to purge air from hydraulic hoses.

NOTE: Pressure should not increase while air is purged from hoses.

f. Turn off the power pack by pressing . Look at the gauge to verify no pressure exists in the hydraulic hoses and the AC Power Pack.

g. Remove the 7/16 in. JIC male-male adapter connecting the hydraulic hoses.

NOTICE
To prevent air from entering the hydraulic hoses, do not spill oil while disassembling the adapter connection. If spilling occurs, replace the lost fluid by manually filling the hoses with hydraulic fluid.

h. Fill both open and close gun chambers with hydraulic fluid.

i. Attach hydraulic hoses to the gun. Tighten each fitting 1/4 turn past hand tight.

NOTE: The hydraulic hose marked with both green and white stripe is for the open port of the gun. The hydraulic hose marked with only a green stripe is for the close port of the gun.

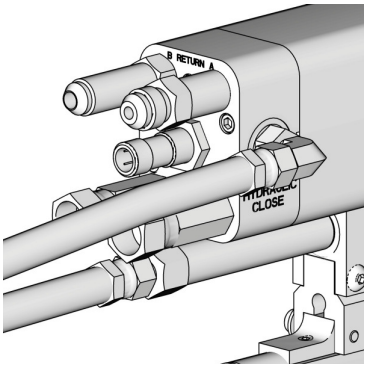

FIG. 19: Hydraulic Connections

j. Attach trigger switch cable (if applicable) to gun and HFR.

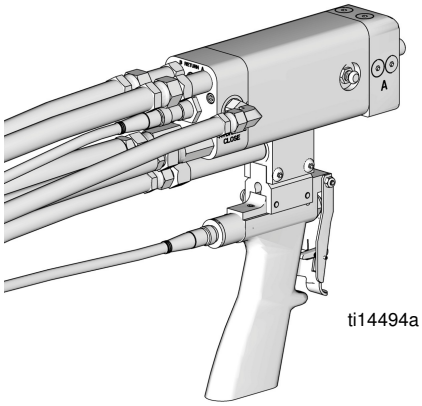

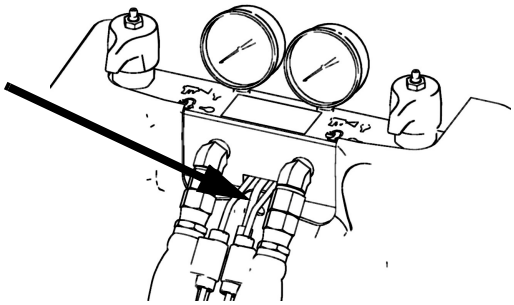

FIG. 20: Cable Connections

12. Setup the Advanced Display Module (ADM)

When main power is turned on by turning the main power switch (MP) to the ON position, the splash screen will be displayed until communication and initialization is complete.

To begin using the ADM, the machine must be on and enabled. To verify the machine is enabled, verify the System Status Indicator Light (CB) is illuminated green, see FIG. 6 on page 20. If the System Status Indicator Light is not green, press the ADM Power On/Off (CA) button . The System Status Indicator Light will illuminate yellow if the machine is disabled.

The blue token (24M560) must be installed to enable cold start up, temperature monitor zones, and shot times less than one second.

NOTICE
To ensure proper machine operation, the blue token must remain installed in the ADM during operation.

If the machine is in the Disabled mode screen press repeatedly to select standby mode.

Navigation

- Press or to navigate to new screens.
- Press or to navigate to new screens or to move between fields.
- Press to activate the desired field or to activate/deactivate an option.

Perform the following tasks to fully setup your system.

Enter Setup Mode by pressing the button.

a. Define shots. See **Shots Screen**, page 55 for more detail.

b. Define sequences. See **Sequences Screen**, page 58 for more detail.

c. **Calibrate HFR**, page 37. See **Calibration Screen, Main**, page 59 for more detail.

d. Define pump information. See **System Screen 1**, page 60 for more detail.

e. Define dispense valve and other system settings. See **System Screen 2**, page 60 for more detail.

f. Define labels and other system settings. See **System Screen 3**, page 61 for more detail.

g. If desired, view/reset counters. See **Maintenance Screen**, page 62 for more detail.

h. Define level sensors and refill settings. See **Supply Screen**, page 63 for more detail.

i. Enable/disable temperature conditioning components. See **Conditioning Screen 1**, page 64 for more detail.

j. Define temperature conditioning setpoints. See **Conditioning Screen 2**, page 64 for more detail.

k. **If Night mode will be used,** define Night mode settings. See **Conditioning Screen 3**, page 65 for more detail.

l. Set general system settings. See **Advanced Screen 1**, page 67 for more detail.

m. Set units of measure. See **Advanced Screen 2**, page 67 for more detail.

n. Enable/disable system features. See **Advanced Screen 3**, page 67 for more detail.

13. Calibrate HFR

NOTE: Machine is calibrated from the factory. Only perform the following steps when changing or rebuilding pumps.

The HFR calibration procedure is a two step process. The first step, Learn Mode, must be performed whenever the pump line is rebuilt or if any other maintenance is performed that may affect the mechanical tolerances in the pump line. If the machine does not appear to be utilizing the full extent of the pump stroke, or if the machine appears to be contacting the end of the hydraulic cylinder, follow the Learn Mode procedure. The Learn Mode procedure will teach the system the mechanical limits of travel.

• **Learn Mode Procedure:**

a. Ensure the dispense valve is set up as either straight head or straight head prox.

b. Navigate to the Calibration screen.

c. Press

d. Press and then . The pump will travel to the right most extreme position.

e. After the pump stops moving, press and then press . The pump will travel to the left most extreme position.

f. After the pump stops moving, press to return to the main Calibration screen.

NOTE: During this process, the system learned the mechanical limits of travel. If the pump did not reach both the left and right extreme limits for any reason, repeat the procedure.

• **Set temperatures:**

This equipment is used with heated fluid, which can cause equipment surfaces to become very hot. To avoid severe burns:
- Do not touch hot fluid or equipment.
- Allow equipment to cool completely before touching it.
- Wear gloves if fluid temperature exceeds 110°F (43°C).

For detailed temperature adjustments, including alarm levels, or upon initial machine configuration, see **Conditioning Screen 2** on page 64 for details. For minor adjustments to the temperature setpoint once the machine has been initially configured, see the **Status Screen** on page 72.

• **Set system control and dispense modes:** See **System Screen 1** on page 60.

• **Set pump sizes:** See **System Screen 1** on page 60.

• **Define Shot Recipes**

a. Navigate to the Shots screen.

b. Press to enter the screen.

c. Use the directional keypad to navigate to the shot detail column for the desired shot number.

d. Type the desired setting for that item then press .

e. Repeat the previous two steps for all desired shot numbers.

• **Change pressure imbalance setting (optional)**

The pressure imbalance function detects conditions that can cause off-ratio dispense, such as loss of feed pressure/supply, pump seal failure, clogged fluid inlet filter, or a fluid leak.

The pressure imbalance default is factory-set at 500 psi (3.5 MPa, 35 bar). For tighter ratio error detection, select a lower value. For looser detection or to avoid nuisance alarms, input a higher value.

a. Navigate to System Screen 3.

b. Press to enter the screen.

c. Navigate to the pressure imbalance field.

d. Type the desired pressure imbalance setting then press .

e. Press and input the specific gravity (SG) of each material into the ADM.

14. Flush the System

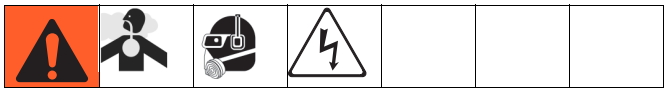

NOTE: System components will contain testing oil from the factory. Perform the following procedure when the machine is initially installed. Both supply and pressure relief must be flushed.

a. Close both A side (Red) and B side (Blue) feed inlet valves on the system. See FIG. 2 on page 14.

b. Close A side (Red) and B side (Blue) material return ball valves on the system.

c. Close both A side (Red) and B side (Blue) material supply ball valves on the system.

d. Place the applicator return hoses into a container.

NOTICE

To prevent cross contamination, keep components A (Red) and B (Blue) in separate containers.

e. Fill tank A (Red) with approximately 5 gal. (19 l) of material and tank B (Blue) with approximately 2 gal. (8 l) of material.

f. Pressurize both material tanks.

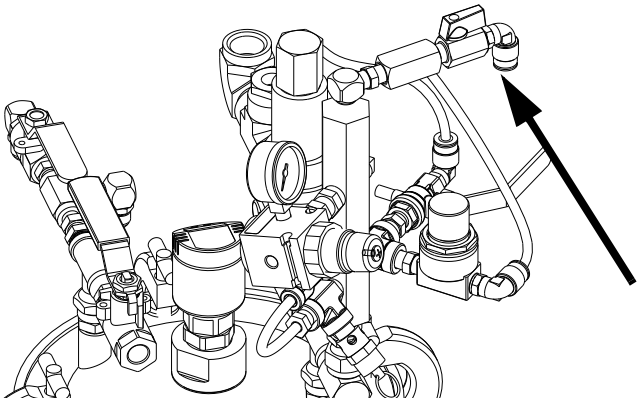

NOTE: A minimum feed pressure of 50 psi (0.35 MPa, 3.5 bar) is required at both feed inlet pressure gauges (FP). Maximum feed pressure is 75 psi (517 kPa, 5.2 bar). Maintain A (Red) and B (Blue) feed pressures within 10% of each other.

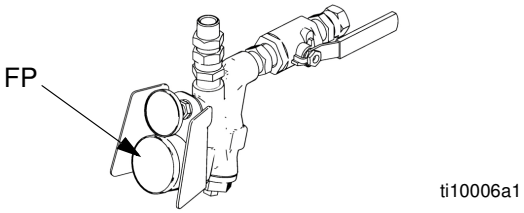

g. Turn HFR main power ON

.

h. Navigate to the System Setup Screen. Set the low pressure dispense to 25%.

NOTE: The following steps are referring to the B side (Blue) components of the system.

i. Set PRESSURE RELIEF/DISPENSE valve (SA, SB) to DISPENSE for the corresponding material side.

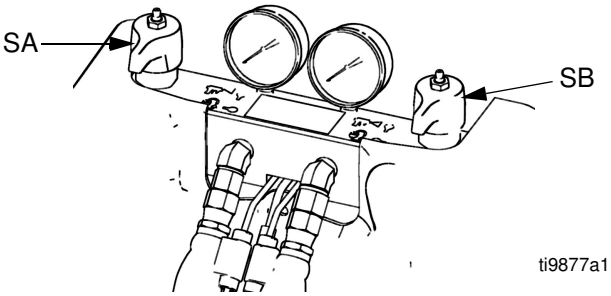

j. Open feed inlet valve and the material supply ball valve on the system.

k. Navigate to the Standby Screen and push to start pumps.

NOTE: Material will dispense into the container from the applicator material hose at this time. Continue to dispense fluid until no material contamination is noticed.

NOTE: If necessary, navigate to Operator Mode to adjust the flowrate

l. Stop dispensing by pushing from the Standby Screen.

m. Close feed inlet valve and the material supply ball valve on the system.

n. Connect the applicator return hose to the fluid inlet fitting on the system.

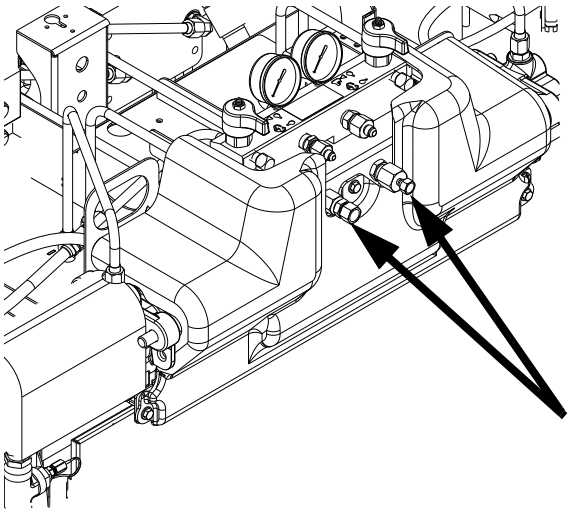

FIG. 21: Return Lines

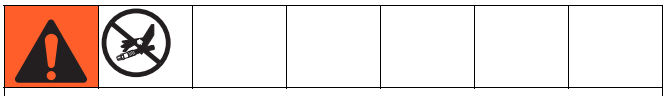

Do not install shutoffs downstream of the PRESSURE RELIEF/DISPENSE valve outlets (BA, BB). The valves function as overpressure relief valves when set to DISPENSE . Lines must be open so valves can automatically relieve pressure when machine is operating.
If circulating fluid back to the supply drums, use high pressure hose rated to withstand the maximum working pressure of this equipment.

o. Ensure all material hose connections are tight.

p. Open the RETURN ball valves on the tank stand.

q. Repeat steps j thru p for A side (Red).

15. Install GX-16 Orifices

a. Close both A side (Red) and B side (Blue) feed inlet valves on the system. See FIG. 2 on page 14.

b. Close A side (Red) material return ball valves on the material tank stand.

c. Follow **Pressure Relief Procedure** on page 44.

d. Remove plugs from GX-16.

e. Install orifices provided.

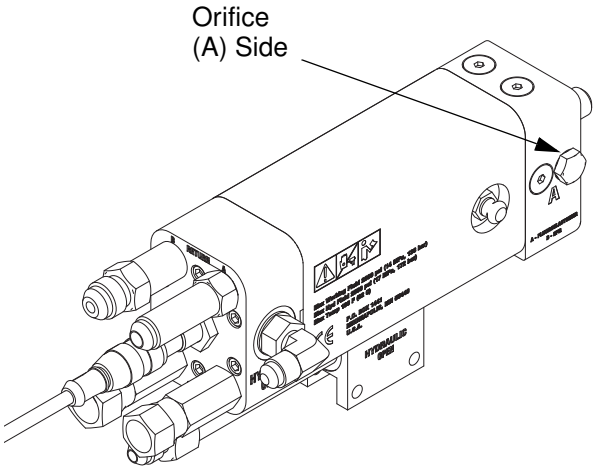

FIG. 22: GX-16 Plug Location

16. Pressure check hose

See hose manual. Pressure check for leaks. If no leaks, wrap hose and electrical connections to protect from damage.

17. Check hydraulic fluid level

Hydraulic reservoir is filled at the factory. Check fluid level before operating the first time, and weekly thereafter. See **Technical Data** on page 95 for specifications.

18. IsoGuard Select Fluid System Setup

Component A (Red) Pump: Fill IsoGuard Select reservoir (LR) with IsoGuard Select fluid (provided by Graco).

a. Lift the reservoir (LR) out of the bracket (RB) and remove the container from the cap.

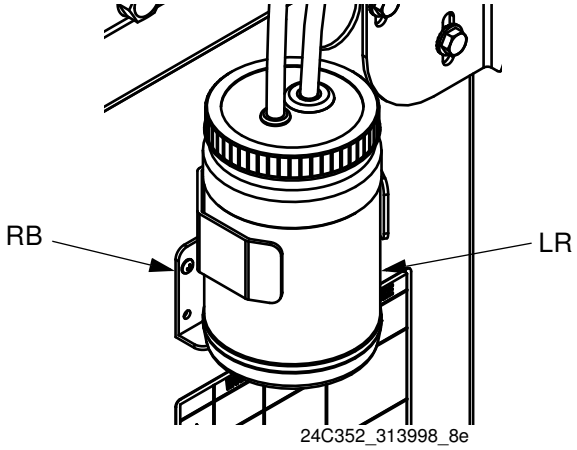

b. Fill with fresh fluid. Thread the reservoir onto the cap assembly and place it in the bracket (RB).

c. Push the supply tube approximately 1/3 of the way into the reservoir. The supply tube is the tube with the check valve with an arrow pointing in the direction of flow towards the IsoGuard Select fluid cylinder.

d. Push the return tube into the reservoir until it reaches the bottom. The return tube is the tube with the check valve with an arrow pointing in the direction of flow away from the IsoGuard Select fluid cylinder.

NOTE: The return tube must reach the bottom of the reservoir to ensure that isocyanate crystals will settle to the bottom and not be siphoned into the supply tube and returned to the pump.

19. Install High Volume Fill Kit (Optional).

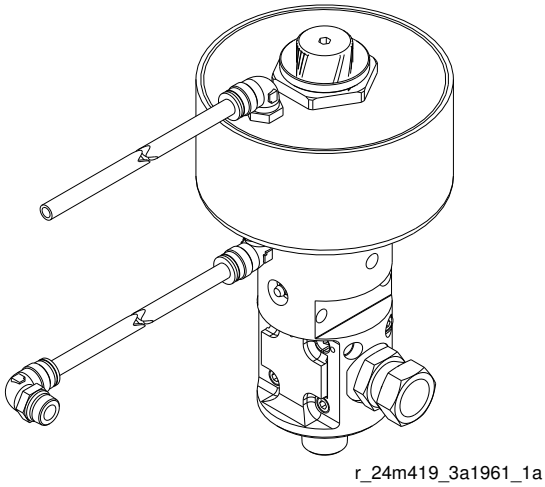

FIG. 23: High Volume Refill Kit

a. Perform **Pressure Relief Procedure**, page 44.

b. Close the ball valves located on the day tanks.

c. Insert the refill valve onto the ball valve.

d. Connect the air tube from the “open” port on the refill valve to the fitting on the solenoid valve that is located inside the tank stand base cube.

e. Remove the plug from other port on the solenoid valve and install the air tube fitting.

f. Connect the air tube from the “close” port on the refill valve to the fitting installed in step e above.

20. Install Low Volume Fill Kit (Optional).

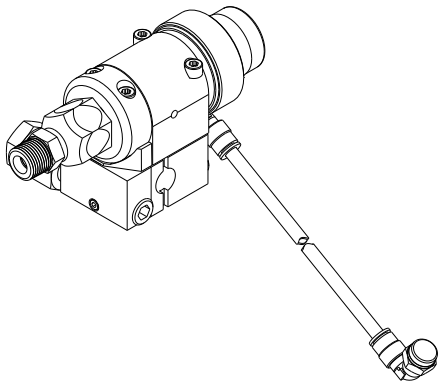

r_24m418_3a1961_1a

FIG. 24: Low Volume Refill Kit

a. Perform **Pressure Relief Procedure**, page 44.

b. Close the ball valves located on the day tanks.

c. Remove the swivel fitting from the day tank inlet port ball valve.

d. Insert the refill valve onto the ball valve.

e. Install the swivel fitting onto the refill valve assembly.

f. Remove the air tube fitting installed on the solenoid valve located inside the tank stand base cube.

g. Install the air tube fitting provided with the kit into the open port on the solenoid valve.

h. Install the air tube from the refill valve to the solenoid valve.

Startup

To reduce the risk of personal injury, do not operate HFR without all covers and shrouds in place.

1. Check that all machine connections are setup. See **Setup** procedure, page 28.
2. Check level and condition of ISO lube daily, see **IsoGuard Select™ System** on page 48.
3. Verify both PRESSURE RELIEF/DISPENSE valves (SA, SB) are set to DISPENSE .

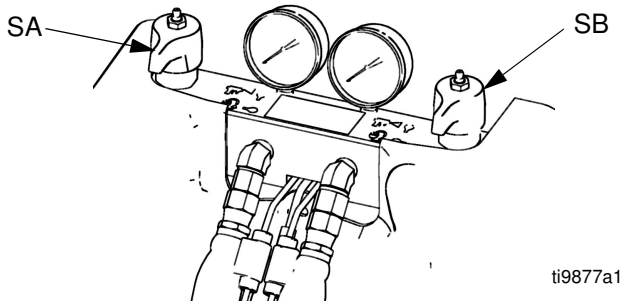

4. *If dispense valve has a trigger safety lock,* engage the trigger safety lock.

5. Open system fluid inlet valves and ball valves found on the material tanks. As applicable, ball valves on the material tanks include material supply, applicator return, and pressure relief. Check for leaks.

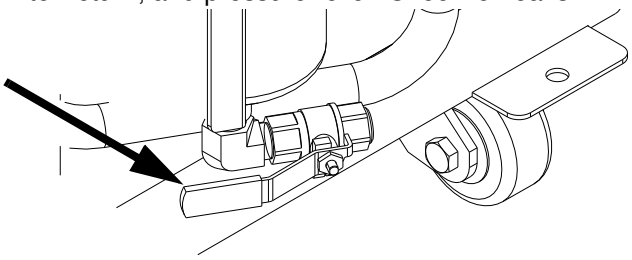

6. Press to enable system. LED should be solid green.
7. Navigate to Home Standby screen and press to initiate auto startup.
8. Check that heat zones are on and temperatures are on target. Check fluid pressure display. Refer to **Status Screen** on page 72 for more details.
9. *If dispense valve has a trigger safety lock,* disengage the trigger safety lock.

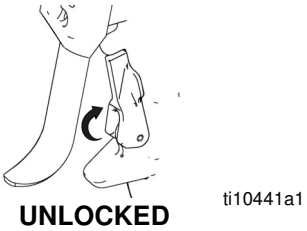

   i. Equipment is ready to dispense.

Shutdown

1. Park pumps.

   a. From the Home screen, press and select Standby mode.

   b. Press . Material will not dispense. Pump will park automatically. Once pump is parked, pump will stop moving.

2. Press to disable the ADM.
3. Turn main power switch (MP) to OFF position.
4. Close A (Red) and B (Blue) fluid supply valves.

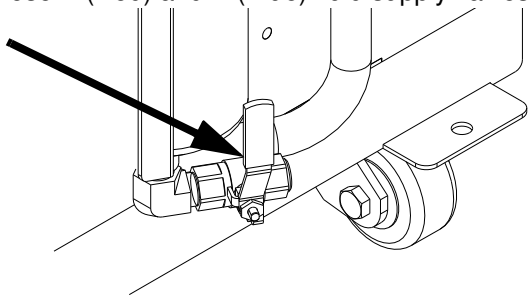

5. Perform **Pressure Relief Procedure** on page 44.
6. Shut down feed pumps as required. See feed pump manual.

Pressure Relief Procedure

1. Press to disable the ADM.
2. Shut off feed pumps and agitator, if used.
3. Turn PRESSURE RELIEF/DISPENSE valves (SA, SB) to PRESSURE RELIEF/CIRCULATION . Route fluid to waste containers or supply tanks. Ensure gauges drop to 0.

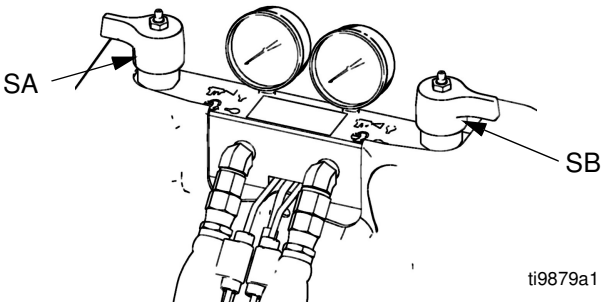

4. **For models with a dispense valve with a safety lock,** engage gun safety lock.
5. Relieve pressure in dispense valve. See dispense valve manual.

Flushing

Flush equipment only in a well-ventilated area. Do not dispense flammable fluids. Do not turn on heaters while flushing with flammable solvents. Heaters must be off and cool when solvent is in the system.

- Flush out old fluid with new fluid, or flush out old fluid with a compatible solvent before introducing new fluid.
- Use the lowest possible pressure when flushing.
- All fluid components are compatible with common solvents. Use only moisture-free solvents. See **Run Screen Icons** on page 53 for list of wetted components to verify compatibility of solvent with wetted materials. See solvent manufacturers information for material compatibility.
- To flush feed hoses, pumps, and heaters separately from heated hoses, set PRESSURE RELIEF/DISPENSE valves (SA, SB) to PRESSURE RELIEF/CIRCULATION . Flush through bleed lines (N).

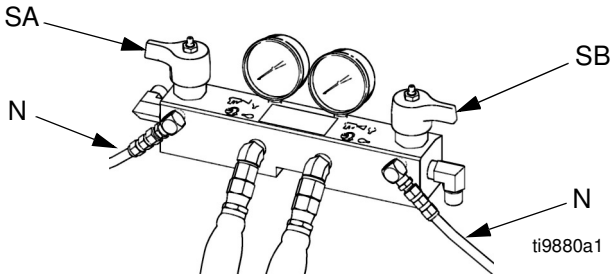

- To flush entire system, circulate through gun fluid manifold (with manifold removed from gun).
- To prevent moisture from reacting with isocyanate, always leave the system dry or filled with a moisture-free plasticizer or oil. Do not use water. See **Important Two-Component Material Information** on page 11.
- *Solvent pails used when flushing*: follow your local code. Use only metal pails, which are conductive, placed on a grounded surface. Do not place pail on a nonconductive surface, such as paper or cardboard, which interrupts grounding continuity.
- *To maintain grounding continuity when flushing or relieving pressure,* hold a metal part of dispense gun firmly to the side of a grounded *metal* pail, then trigger gun.

Maintenance

Task	Schedule
Change break-in oil in a new unit	After first 250 hours of operation or within 3 months, whichever comes first
Inspect hydraulic and fluid lines for leaks	Daily
Inspect IsoGuard Select™ fluid level and condition, refill or replace as needed, page 48	Daily
Check hydraulic fluid level	Weekly
Grease circulation valves with Fusion® grease (117773)	Weekly
Verify operation of air drying system to prevent isocyanate crystallization	Weekly
Verify vent holes on bottom of electrical cabinet are clear and unobstructed	Weekly
Inspect air filter (part 24H018), clean or replace as necessary,	Daily
Use compressed air to remove dust buildup on control boards, fan, motor (under shield), and hydraulic oil coolers	Monthly
Clean up all hydraulic leaks; identify and repair cause of leak	As needed
Inspect the gun, fluid lines, trigger switch cable and proximity switch cable for wear or damage	Daily
Grease (117773 or 0553-6) the gun	Weekly or every 15,000 shots
Clean and service the orifices and filters	As Needed
Check Accumulator Pre-Charge	Weekly
Check tightness of all clamps and fittings	Weekly
Check hoses for wear	Monthly
Check hydraulic fluid and filter	6 months
Grease (115982) high volume refill valve, if equipped	Monthly

Change Break-in Oil

After initial break-in, see Table 5 for recommended frequency of oil changes.

Table 3: Frequency of Oil Changes

Ambient Temperature	Recommended Frequency
0 to 90°F (-17 to 32°C)	1000 hours or 12 months, whichever comes first
90°F and above (32°C and above)	500 hours or 6 months, whichever comes first

Grease Circulation Valves With Fusion Grease (117773)

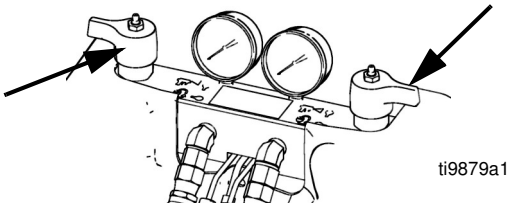

Check Hydraulic Fluid Level

Check hydraulic fluid level on dipstick. Fluid level must be between indent marks (IM) on dipstick. Refill as required with approved hydraulic fluid; see **Run Screen Icons** on page 53. If fluid is dark in color, change fluid and filter.

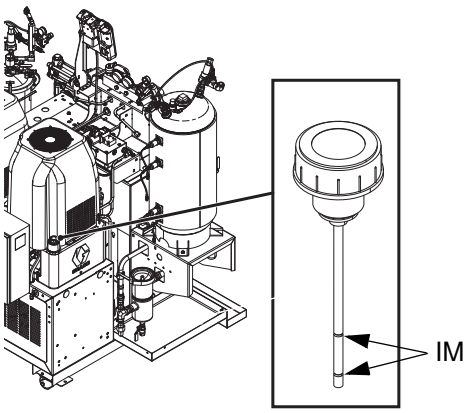

Install Upgrade Tokens

NOTE: The Motor Control Module, Fluid Control Module, and Temperature Control Module connection to the system is temporarily disabled during the installation of upgrade tokens.

To install software upgrades:

1. Use correct software token stated in the table. See Graco Control Architecture™ Module Programming manual for instructions.

NOTE: Upgrade all modules in the system to the software version on the token, even if you are replacing only one or two modules. Different software versions may not be compatible.

All data in the module (System Settings, USB Logs, Recipes, Maintenance Counters) may be reset to factory default settings. Download all settings and user preferences to a USB before the upgrade, for ease of restoring them following the upgrade.

See manuals for locations of specific GCA components.

The software version history for each system can be viewed in the technical support section at www.graco.com.

Token	Application
16H821	**HFR**: - Advanced Display Module - Motor Control Module - High Power Temperature Control Module - Fluid Control Module (AC Power Pack) - Discrete Gateway Module - Communication Gateway Module
16G584	**Tank Stand:** - Fluid Control Module - Low Power Temperature Control Module
16G407	**Ratio Monitoring (Flow Meters)**: - Fluid Control Module

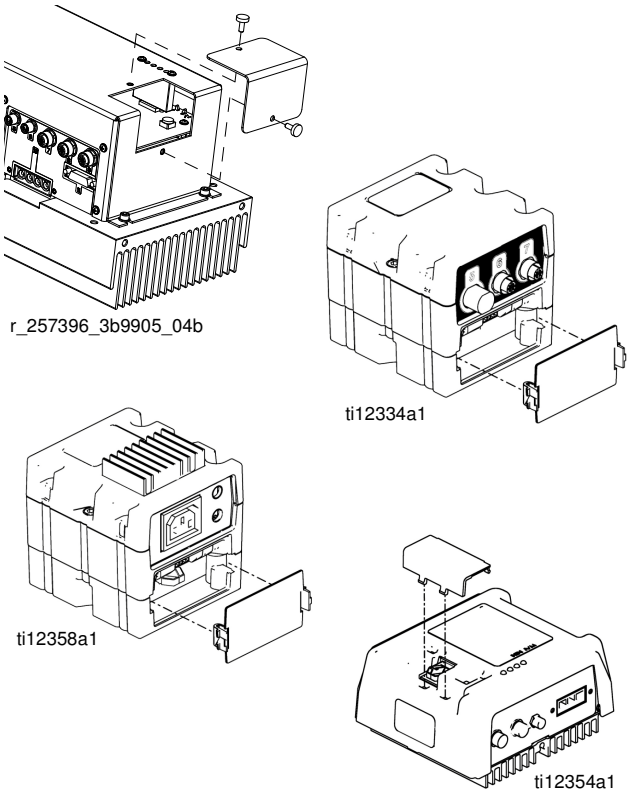

FIG. 25: Remove Access Cover

IsoGuard Select™ System

Check the condition of the A (Red) pump IsoGuard Select fluid daily. Change the fluid if it becomes a gel, its color darkens, or it becomes diluted with isocyanate.

Gel formation is due to moisture absorption by the pump IsoGuard Select fluid. The interval between changes depends on the environment in which the equipment is operating. The pump lubrication system minimizes exposure to moisture, but some contamination is still possible.

Fluid discoloration is due to continual seepage of small amounts of isocyanate past the pump packings during operation. If the packings are operating properly, IsoGuard Select fluid replacement due to discoloration should not be necessary more often than every 3 or 4 weeks.

To change pump IsoGuard Select fluid:

1. Perform **Pressure Relief Procedure** on page 44.
2. Remove fittings from IsoGuard Select fluid cylinder inlet and outlet ports. Keep supply tube, return tube, and leak management tube connected to the fittings.
3. Carefully place ends of tubes with fittings still connected into an empty pail to drain IsoGuard Select fluid.
4. Lift the IsoGuard Select fluid reservoir out of the bracket and remove the container from the cap. Holding the cap over a suitable container, remove the inlet check valve and allow the IsoGuard Select fluid to drain. Reattach the check valve to the inlet hose. See FIG. 26.
5. Drain the reservoir and flush it with clean IsoGuard Select fluid.
6. When the reservoir is flushed clean, fill with fresh IsoGuard Select fluid.
7. Thread the reservoir onto the cap assembly and place it in the bracket.
8. Push the supply tube approximately 1/3 of the way into the reservoir.
9. Push the return tube into the reservoir until it reaches the bottom.

NOTE:

The return tube must reach the bottom of the reservoir, to ensure that isocyanate crystals will settle to the bottom and not be siphoned into the supply tube and returned to the pump.

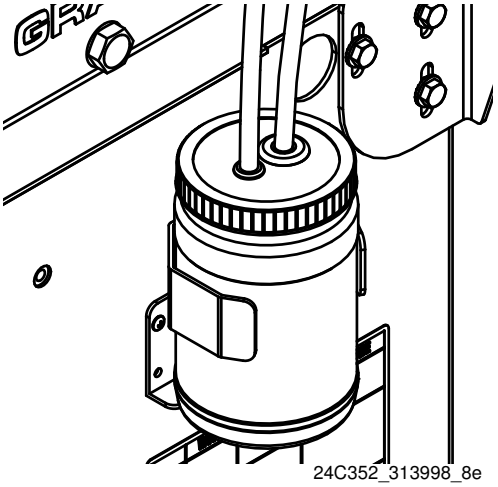

FIG. 26: IsoGuard Select Fluid System

Prime IsoGuard Select Fluid Cylinder

Ensure that the IsoGuard Select fluid cylinder outlet faces upward for air to exhaust.

1. Remove check valve from end of inlet tube.
2. Cut tip of IsoGuard bottle and fill the reservoir through the tube.
3. With check valve arrow pointing towards the IsoGuard Select fluid cylinder, install check valve in end of inlet tube.
4. Install tubes into reservoir and install reservoir into holder.

Troubleshooting

Before performing any troubleshooting procedure:

1. Perform **Pressure Relief Procedure** on page 44.
2. Turn main power OFF.
3. Allow equipment to cool.

Try the recommended solutions in the order given for each problem, to avoid unnecessary repairs. Also, determine that all circuit breakers, switches, and controls are properly set and wiring is correct before assuming there is a problem.

Light Tower (Optional)

Signal	Description
Green on only	System is powered up and there are no error conditions present
Yellow on	An advisory exists
Red flashing	A deviation exists
Red on	The system is shut down due to an alarm occurring.

Errors include advisories, deviations, or alarms, so green will only be on when none of these occur. A yellow light can be on at the same time as red (flashing or solid on) when an advisory exists at the same time as a deviation or alarm.

PROBLEM	CAUSE	SOLUTION
General		
Display Module completely dark	No Power	Verify AC Power switch is ON
	Thrown Breaker	Check Machines Breakers and Reset
	Loose Connection	Tighten 5-pin cable on Advanced Display Module
	Bad Display Module	Replace Advanced Display Module
No or incorrect amount of material dispensed from either side	Ball Valve closed (if Installed)	Open tank ball valve.
	Tank Empty	Add fluid
	Tank Clogged	Clean tank
	Air In Material	Prime the machine
Significant material leaking from pump seal	Pump shaft worn and/or shaft seal worn	Remove pump shaft assembly and reinstall read pump rebuild kit
Material dispensed not correct weight	Specific gravity of one or more of the two materials has changed since calibration	Run calibration
	Check valve malfunction	Remove check valve; clean or replace as necessary
	Piston worn or broken	Replace Piston
A (Red) and B (Blue) Primary Heaters		
Control of primary heat is abnormal; high temperature overshoots	Dirty RTD connection	Unplug and re-plug RTD wires.
	RTD not contacting heater element	Loosen ferrule nut, push in RTD so tip contact heater element. Holding RTD tip against heater element, tighten ferrule nut 1/4 turn past tight.
	Failed heater element	Replace
	Signal failure from RTD	Check connections
	RTD wired incorrectly	Check connections. Power up zones one at a time and verify that temperature for each zone rises.
Hose System		
Material heats but heats slower than usual or it does not reach temperature	Ambient temperature is too cold	Use auxiliary hose system.
	FTS failed or not installed correctly	Check FTS

PROBLEM	CAUSE	SOLUTION
Material does not maintain temperature while spraying	Ambient temperature is too cold	Increase A (Red) and B (Blue) setpoints to increase fluid temperature and keep it steady
	Flow too high	Use smaller mix chamber. Decrease pressure.
Material temperature exceeds setpoint	Faulty RTD connections	Verify that all FTS connections are snug and that pins of connectors are snug and that pins of connects are clean. Examine connection of thermocouples to long green plug on heater control board. Unplug and re-plug RTD wires, cleaning off any debris. Unplug and re-plug long green connector on heater control board.
Erratic material temperature	Faulty RTD connection	Verify that all FTS connections are snug and that pins of connectors are clean. Examine connection of RTD to long green plug on heater control board. Unplug and re-plug RTD wires, cleaning off any debris. Unplug and re-plug long green connector.
	FTS not installed correctly	FTS should be installed close to end of hose in same environment as gun. Verify FTS installation.
Material does not heat	FTS failed or is not contacting correctly	Check FTS
	FTS not installed correctly	FTS should be installed close to end of hose in same environment as gun. Verify FTS installation.
	Temperature control alarm	See **Advanced Display Module (ADM)** on page 20
Proportioning System		
Proportioning pump does not hold pressure when stalled	Pump piston or intake valve leaking	1. Observe gauges to determine which pump is losing pressure. 2. Determine in which direction the pump has stalled by observing which directional valve indicator light is on. 3. Repair the valve.
Material imbalance.	Inadequate flow from pump; cavitation	Increase fluid supply to proportioning pump: • Use 2:1 supply pump • Use minimum 3/4 in. (19 mm) ID supply hose, as short as practical
		Fluid is too thick. Consult your material supplier for the recommended fluid temperature to maintain a viscosity of 250 to 1500 centipoise.
		Clean inlet strainer screen
		Worn pump inlet valve ball/seat or gasket
	Pressure relief/circulation valve leaking back to supply	Remove return line and determine if flow is present while in SPRAY mode
Erratic pump movement	Pump cavitation	Feed pump pressure is too low. Adjust pressure to maintain 100 psi (0.7 MPa, 7 bar) minimum.
Pump output low	Obstructed fluid hose or gun; fluid hose ID too small	Open, clear; use hose with larger ID
	Worn piston valve or intake valve in displacement pump	See pump manual 3A0019
	Inadequate feed pump pressure	Check feed pump pressure and adjust to 100 psi (0.7 MPa, 7 bar) minimum.

Appendix A - ADM Icons Overview

Setup Screen Icons

Icon	Description
	Enter Screen
	Exit Screen
	On Learn Mode Calibration screen: Move pump *All other screens:* Begin Dispense
	Stop Dispense
	Abort Changing the Label
	Select left direction
	Select right direction
	Backspace
	Back to main calibration screen from learn mode calibration screen or Back to system screen 2 from mix head operating details screen
	Access Learn Mode Calibration screen
	Run MCM Learn Mode
	Proceed to next step in calibration procedure
	On Main Calibration screen: Calibrate Weight Dispense or Enter Specific Gravity Information *On Flow Meter Calibration screen:* Use Dispensed Material Weight to Calibrate Flow Meters. If pressed, icon will change and units are changed to volume units.
	Erase Selected Item or Control Data

Icon	Description
	Erase All Counters on Page
	Access Flowmeter Calibration
	Valve Details
	Selects all shots to be changed to the same user specific value
	Pressure
	Shot Number
	Sequence Position
	Flow
	Time (Duration)
	Tank Blanket Heater
	Primary Heater
	Heated Hose
	Chiller
	Move Cursor to the Left
	Move Cursor to the Right
	Upper/Lower Case Letters
	Positive / Negative

Run Screen Icons

Icon	Description
	Select mode.
	Set system in park (icon will be selected when system is parked)
	Open, Close Valve
	A (Red) and B (Blue) refill button (Press to start/abort refill)
	With a mix head installed: Turns on the mix head hydraulics and puts the machine in low pressure circulation. Press a second time to turn off instigated system action.
	If Green: Allowed to Dispense *If Yellow:* System is in a pre-dispense state *If Red:* Not Allowed to Dispense
	Stop Dispense
-- OR 1	Jump in and use the key pad to select a shot number.
	Skip the next shot in selected sequence. Only available when the system is not dispensing.
	Abort sequence and reset to first valid position
	Edit Operator Dispense Setting
	Press to enter the Conditioning Control screen
	Turn on or off the highlighted zone.
	Turn on or off all zones.
	Erase a single batch
	Erase all batch data points

Icon	Description
	Sets machine to low pressure
	Sets machine to high pressure
75 °F 122 °F	Current and setpoint temperature for primary heater. Not displayed if heat zone is not enabled.
-- °F 122 °F	Current and setpoint temperatures for heated hose. Not displayed if heat zone is not enabled.
-- °F	Current temperatures for heated hose monitor. Not displayed if heat zone is not enabled.
-- °F 122 °F	Current and setpoint temperatures for tank blanket. Not displayed if heat zone is not enabled.
-- °F	Current temperatures for tank blanket monitor. Not displayed if heat zone is not enabled.
71 °F 66 °F	Current and setpoint temperatures for chiller. Not displayed if heat zone is not enabled.
71 °F	Current temperatures for chiller monitor. Not displayed if heat zone is not enabled.
	Amount of material moved through pump (volume tracking)
	Cycles
	Activates the PrePoly Refresh

Appendix B - ADM Setup Screens Overview

The ADM will start in the Run screens at the “Home” screen. From the Run screens, press to access the Setup screens. If the Setup screens password is turned on, use the ADM keypad to enter the password then press .

From the Setup screens, press to access the Run screens. For Run screens information, see **Technical Data** on page 95. FIG. 27 shows the flow of the Setup screens.

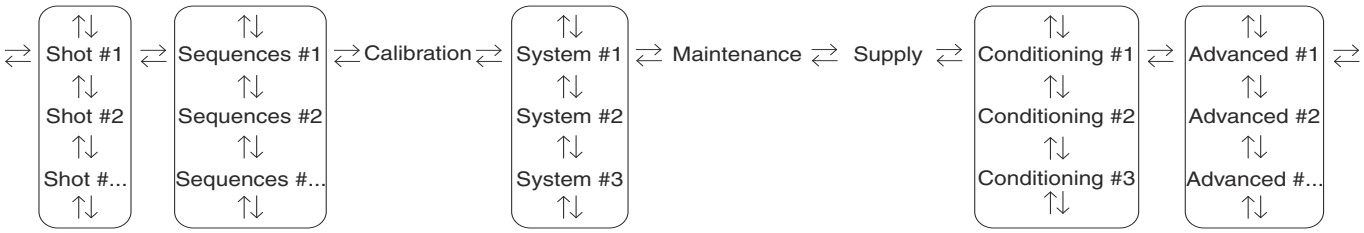

* Gateway screen will automatically be enabled when a CGM is installed on the system

FIG. 27: Setup Screens Navigation Diagram

Shots Screen

This screen allows the user to edit shot definitions. The contents of this screen change based on the flow units selection. Shots are defined by flow rate and weight or time (duration). See **Home Screen, Shot Mode** on page 70 for information on how to use predefined shots.

NOTE: 100 shot definitions are available across ten pages.

To edit a shot definition:

1. Press then use the arrow keys to navigate to the desired value.

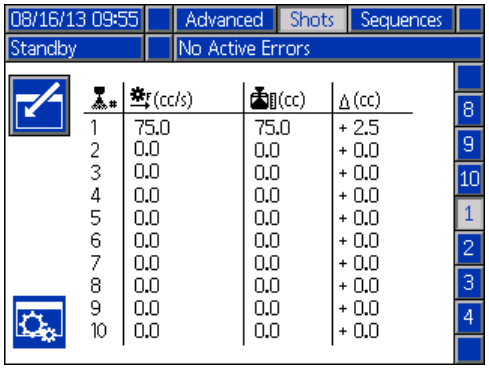

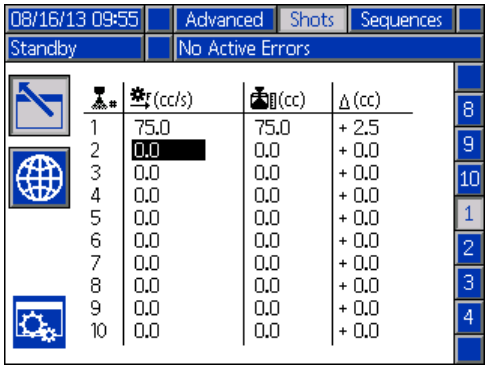

2. Type the new value then press to accept the new value.
3. If desired, press to quickly enter the same value for the rate and time/volume/weight.
4. Repeat step 2 as required.

Due to variation in material properties, the ? column gives the ability to adjust the shot time/volume/weight for each defined shot.

NOTE: If the ? column is used, it is recommended that a minimum of 5 shots are dispensed, measured and averaged for each dispense before entering a value for the ? column.

Time Based Example:

A 75 cc/s shot is defined to dispense for 2 seconds.

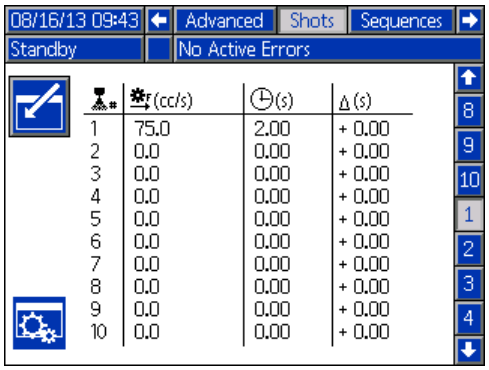

1. Dispense 5 shots into 5 separate containers.
2. Measure the dispensed amount and record the data.

Shot	Example 1 Dispensed Volume (cc)	Example 2 Dispensed Volume (cc)
1	146.2	156.2
2	146.4	156.4
3	145.6	155.6
4	145.8	155.8
5	146.0	156.0

3. Calculate the average of the 5 shots.
   Example 1 = 146cc
   Example 2 = 156cc

4. Use the following formula to calculate the ? column value.

$$\frac{((\text{Flow Rate} \times \text{Time}) - \text{Average Volume})}{\text{Flow Rate}}$$

Example 1:

$$\frac{((75\text{cc/sec} \times 2\text{sec}) - 146\text{cc})}{75\text{ cc/sec}} = 0.053 \text{ sec}$$

Example 2:

$$\frac{((75\text{cc/sec} \times 2\text{sec}) - 156\text{cc})}{75\text{ cc/sec}} = -0.08 \text{ sec}$$

5. Enter the calculated value in the ? column.

Example 1:

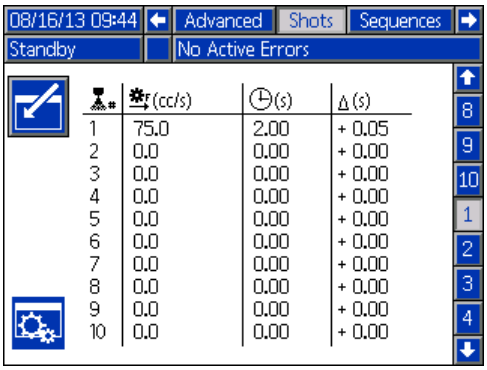

Example 2:

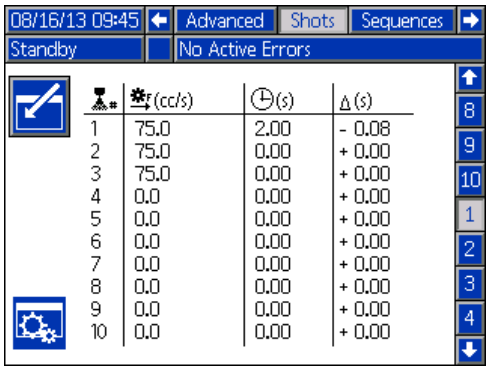

NOTE: Depending on the dispensed volume average, the ? column may be either a positive or negative value.

Volume/Weight Based Example:

A 75 cc/s shot is defined to dispense for 75 cc.

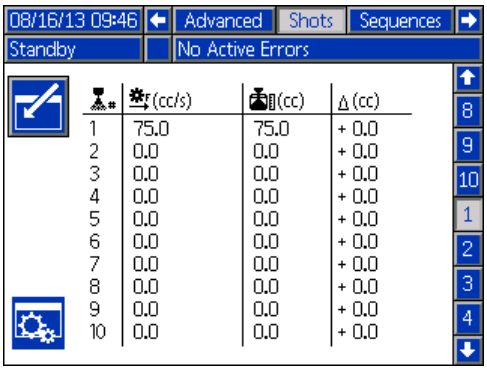

1. Dispense 5 shots into 5 separate containers.
2. Measure the dispensed amount and record the data.

Shot	Example 3 Dispensed Volume (cc)
1	72.2
2	72.4
3	72.6
4	72.8
5	72.5

3. Calculate the average of the 5 shots.
   Example 3 = 72.5cc
4. Use the following formula to calculate the ? column value.

   (Requested Amount - Actual Amount)

Example 3:

(75cc - 72.5cc = 2.5cc)

5. Enter the calculated value in the ? column.

Example 3:

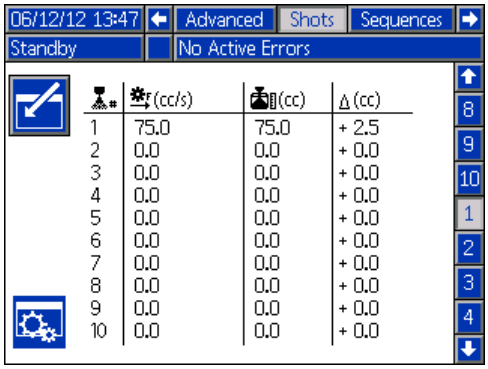

Shot Calibration Table

This screen allows the user to set the offset, ?(g), for a calculated range of shot sizes based on pump sizes and material specific gravity.

NOTE: This table is only available when defining the shot by weight.

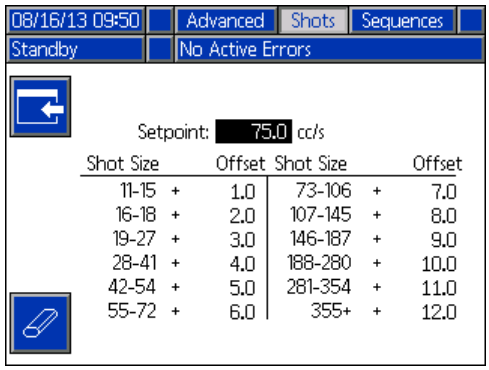

To enable the shot calibration table:

1. Navigate to **Advanced Screen 4**.

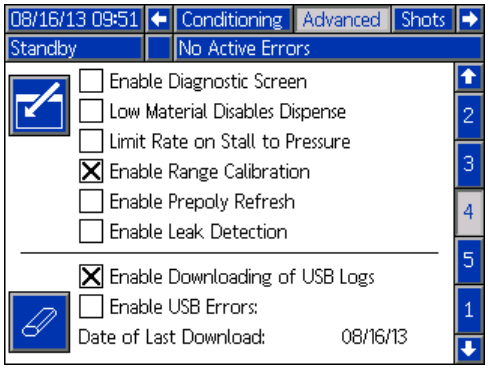

2. Press then use the arrow keys to navigate to the “Enable Range Calibration” option.

3. Press to activate the option.

To edit a shot definition:

1. Navigate to **Shots Screen**.

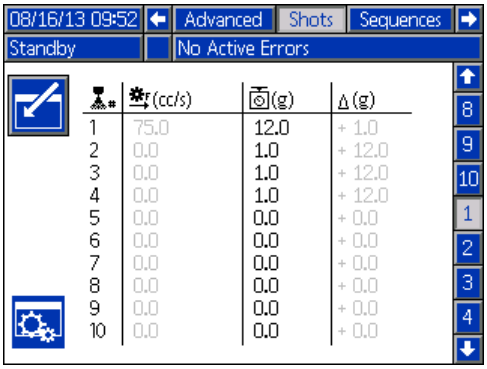

2. Press to enter the screen.

3. Press to show the shot calibration table.

4. Press then use the arrow keys to navigate to the desired value.

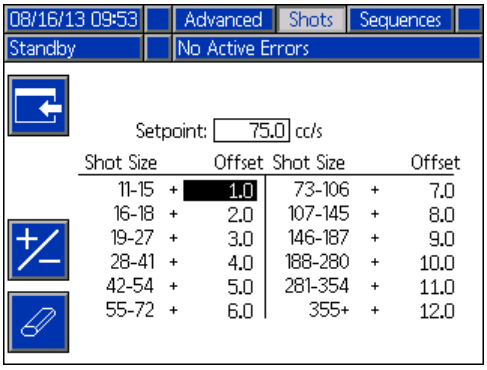

5. Type the new value then press to accept the new value.
6. Repeat as required for other ranges.

Weight Based Example Using Shot Calibration Table:

NOTE: The offset needs to be determined for each range and may need to be modified if the flow rate changes. Visit www.graco.com and search for PKE "Shot Calibration Table Worksheet" to assist in the calculations for the following procedure.

NOTE: Offset ranges are dependant on material ratio and material specific gravity. The values shown are for reference only.

1. Dispense five shots into separate containers for an average range.
2. Measure the amount for each shot size and record the data.
3. Repeat steps 1 and 2 for all twelve ranges.
4. Calculate the average for each range and record the data.

$$\frac{(Shot1 + Shot2 + Shot3 + Shot4 + Shot5)}{5}$$

5. Calculate the offset of each shot size and record the data.

Target Shot Size - Average Shot Size

6. Enter the offset into the table.

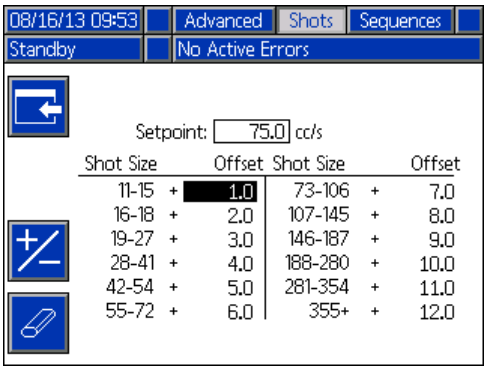

7. Repeat steps 1 through 6 for more precise offsets.

Example:

Step Ref.	Shot Number	Range: 11-15g Target Shot Size: 13g
1,2	Shot 1	11.600
1,2	Shot 2	12.200
1,2	Shot 3	12.400
1,2	Shot 4	11.900
1,2	Shot 5	12.000
4	Average Shot Size	12.02
5	Offset	0.98

Sequences Screen

This screen allows the user to edit sequence information.

See **Home Screen, Sequence Mode** on page 71 for information on how to use predefined sequences.

NOTE: Five sequences with 20 positions each are available across 10 pages.

NOTE: Sequence positions are made from shots defined in the **Shots Screen.**

To edit a sequence:

1. Press then use the arrow keys to navigate to the desired value.
2. Type the new value then press to accept the new value.

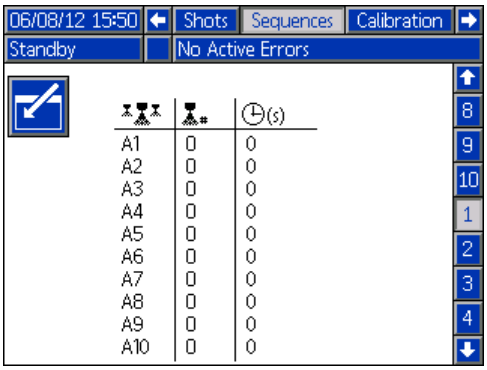

Calibration Screen, Main

This screen shows calibration information for the system and provides access to other calibration screens. See **Calibrate HFR** on page 37 for how to use the calibration screens to calibrate the machine.

The date next to each key represents the last time that calibration was performed.

The “Cal. Min” and “Cal. Max” values are the system recognized extreme ends of piston travel. See **Calibration Screen, Learn Mode**.

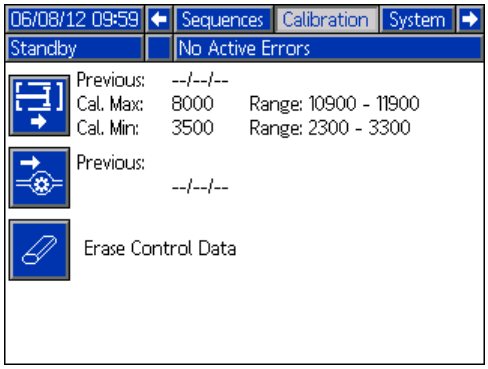

Press to go to the **Calibration Screen, Learn Mode** screen.

Press to erase the motor control database in the motor control module.

Calibration Screen, Learn Mode

This screen allows the user to calibrate piston position. The piston can be moved to the left and right to obtain the full range of motion. See **Calibrate HFR** on page 37 for how to use this screen to calibrate the machine.

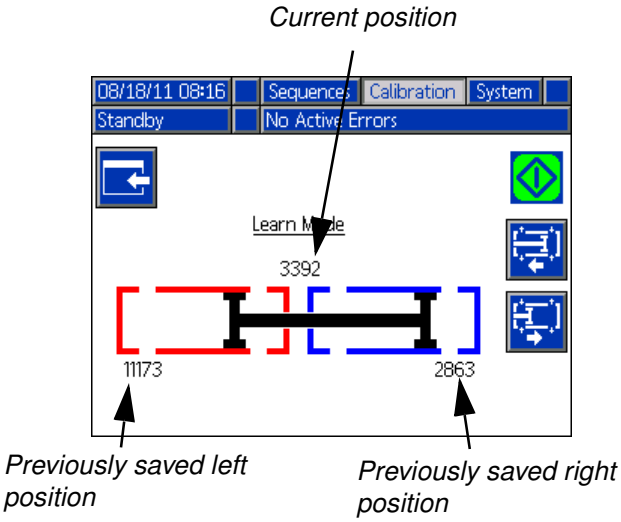

Press and then to move the pump all the way to the left.

Press and then to move the pump all the way to the right.

Press to return to the **Calibration Screen, Main**. This saves the new left and right numbers.

System Screen 1

This screen allows the user to set important system settings. Control Mode can be set to Flow. With Control Mode set to Flow, the machine will dispense at a continuous flow rate regardless of pressure fluctuations unless pressure alarm conditions occur.

Dispense Mode can be set to Time, Volume, and Weight. Dispense Mode controls how displayed amounts are measured. See **Calibrate HFR** on page 37 for more information.

Pump sizes and inlet pressures must be entered on this screen.

NOTICE

If pump sizes and inlet pressures are not entered properly, system performance will be affected.

The inlet pressure must be set to the maximum feed pressure that will be seen by that side of the machine.

The maximum working pressure for the machine is displayed on this screen. The maximum working pressure is dependent on the installed hoses and dispense valve. The maximum working pressure is set to the lowest rated system component. If 2000 psi hoses are installed and the maximum working pressure displayed is not 2000 psi, see manual 313998 for instructions to set the maximum working pressure for hoses. If the installed dispense valve rating is below the maximum working pressure shown here, verify the correct dispense valve is selected on System Screen 2.

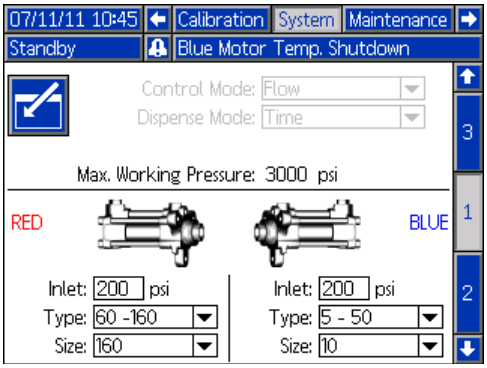

System Screen 2

This screen allows the user to set which items are installed on the machine.

The hydraulic level sensor and hydraulic RTD for both the pump line and mix head must be marked as enabled when installed in the system. If the sensors are not marked as enabled, they will be ignored by the machine controls.

Select the dispense valve installed in the system. This selection is critical to ensure proper operation of the machine. When a mix head is selected, button will become active when the is pressed. When active, pressing this button will open a screen used to define the mix head operating parameters. See the **Mix Head Operating Details Screen** on page 61.

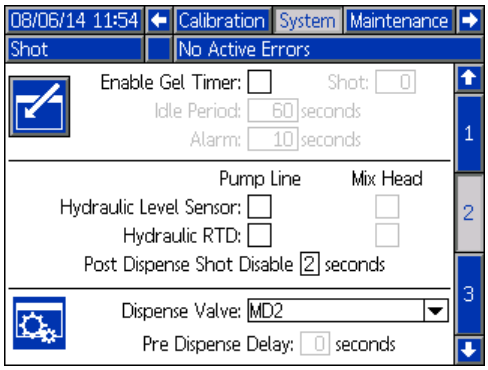

Post Dispense Shot Disable is a feature where the user can disable shot requests for zero to five seconds after the completion of a dispense. This feature is not applicable for P2/Fusion Dispense Valves. This feature can not be active if the Pre Dispense Delay feature is active.

Pre Dispense Delay is a feature where the HFR can delay the start of a dispense until the user has pressed and held the foot switch for the duration entered. For example, if the user enters a five second duration, the footswitch must be held on continuously for five seconds before the HFR will start a dispense. This feature is not available for recirculation systems or applicable for P2/Fusion Dispense Valve applications. This feature can not be active if the Post Dispense Shot Disable feature is active.

Mix Head Operating Details Screen

This screen allows the user to define the mix head operating parameters.

- **Low Pressure Circulation:** The percentage of setpoint, 10%-90%, at which the system will run during low pressure circulation.
- **Pre-Dispense Circulation:** The time for which the system will circulate at high pressure prior to dispensing when the dispense command is triggered while the system is in low pressure circulation.
- **Post-Dispense Circulation:** The time duration that the system will remain in high pressure circulation after a dispense before dropping into low pressure circulation. Entering “0” disables the post-dispense time.

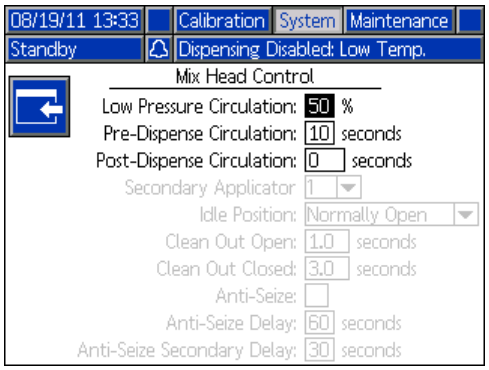

Press to go back to the **System Screen 2**.

System Screen 3

This screen allows the user to edit the labels for the A (Red) and B (Blue) sides of the machine. The labels set for the A (Red) and B (Blue) sides of the machine are displayed throughout the screens. Labels are limited to five characters.

To edit a label:

1. Press .
2. **To edit the A (Red) label,** press .
   To edit the B (Blue) label, press the down arrow then press . The keyboard will appear on the screen. See **Keyboard Screen** on page 62.

The pressure imbalance setting is set from this screen. Pressure imbalance is the allowable difference in pressure between the two materials before an alarm is triggered. The input range is 145-2000 psi (1-14 MPa, 10-138 bar).

The flowmeter types are defined on this screen. The ratio deviation value is the allowable percentage before the machine displays a pop-up notification. The ratio alarm value is the allowable percentage difference before the machine will stop a dispense.

The ratio displayed between chemicals can be changed between blue or red, allowing either chemical to be displayed as a ratio to 1.

This screen allows the user to enter material specific gravities.

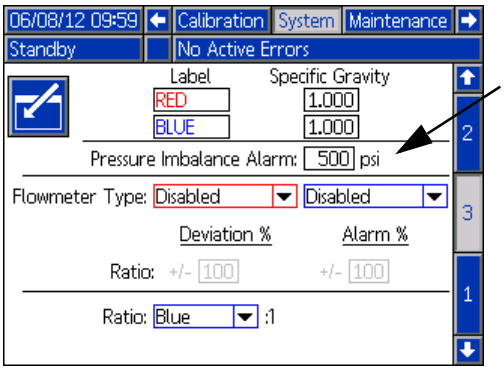

Keyboard Screen

This screen is used to edit the A (Red) and B (Blue) labels on the ADM. Use arrow keys to select the desired letter and press to accept the letter.

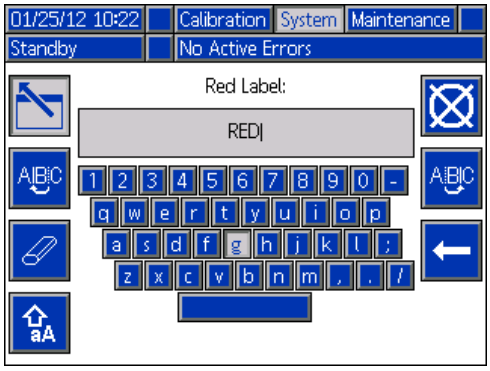

1. Use arrow keys to select the desired letter and press to accept the letter. To erase all text, press . To delete one letter, press . To move the cursor one letter to the left, press . To move the cursor one letter to the right, press . To toggle the letters from upper/lower case, press .
2. When finished entering the new label, press .

Maintenance Screen

This screen shows shot number, sequence position, and dispense valve counters. Press and navigate to the drop down box. Press and scroll to a range of counters to view. Press again to select the range of counters and display them on the screen.

Counters may be erased individually. Navigate to the counter you want to erase and press . Alternatively, each counter displayed on the page may be erased simultaneously by pressing .

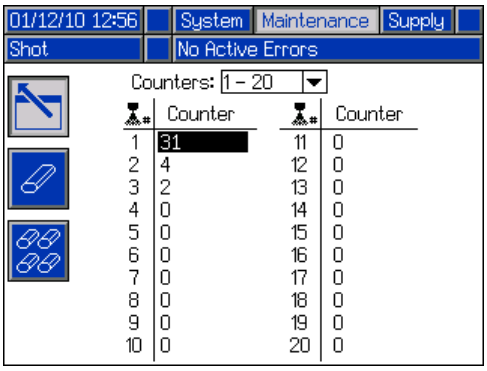

Supply Screen

This screen allows the user to specify the operating parameters for off-board, integrated tanks and indicate which positions have level sensors installed. See the Tank Feed Systems manual for information about installing level sensors, see **Related Manuals** on page 3. The user may select from the following refill settings: Disabled, Monitor, Manual, Auto Top-Off, Auto Full-Volume.

NOTE: Use the “Disabled” setting if off-board tanks are not installed.

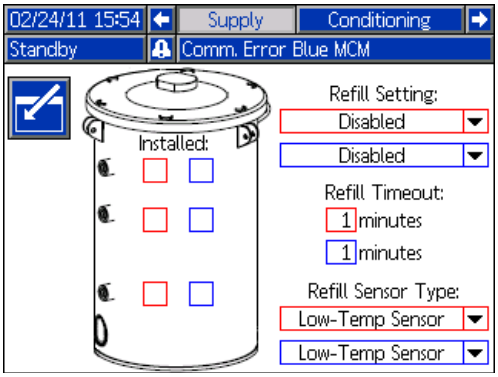

The following describes system operation when each tank mode is selected.

- **Disabled**
  - Disables tank operation
- **Monitor (2 Sensors)**
  - The top sensor generates a high level deviation and the bottom sensor generates a low level alarm
  - Refill is not supported, no button is provided on the run screens to initiate refill
  - Errors will clear when the corresponding condition clears
- **Manual (2 Sensors)**
  - The top sensor generates a high level deviation and the bottom sensor generates a low level alarm
  - A button is provided to the user on the run screens to initiate a manual refill operation at any time
  - Manual refill will run until either the high level sensor sees material, the user aborts the refill via the refill button on the run screens, or the refill time-out expires
  - The low level alarm will clear when the condition clears
- **Auto Top-Off (2 or 3 Sensors)**
  - Automatically selected with three level sensors selected
  - The low level sensor will generate a low level alarm
  - *Two level sensors installed*: When the high level sensor does not see material, automatic refill will begin and continue until either the high level sensor sees material or until the refill time-out expires
  - *Three level sensors installed*: When the middle level sensor does not see material, automatic refill will begin and continue until either the middle level sensor sees material or until the refill time-out expires
  - The low level alarm will clear when the condition clears
  - A button is provided to the user on the run screens to initiate an automatic refill operation at any time, this button can also be used to abort a refill operation
- **Auto Full-Volume (2 Sensors)**
  - The low level sensor will initiate an automatic refill when it does not see material
  - Automatic refill will continue until either the high level sensor sees material or until the refill time-out expires
  - The low level alarm will clear when the condition clears
  - A button is provided to the user on the run screens to initiate an automatic refill operation at any time, this button can also be used to abort a refill operation

Refill Setting

If a refill setting other than Disabled is selected, the user must set at least two level sensor locations as installed by checking the check box on the screen. If all three locations are set to installed, the system will default to the Auto-Top Off refill setting and operate as follows:

- The low level sensor will generate a low level alarm.
- The high level sensor will generate a high level deviation and abort any automatic refill operation.
- When the middle sensor is not satisfied, automatic refill will begin and will run until either the middle sensor is satisfied, the high level sensor generates a deviation (if the middle sensor fails), or the refill time-out expires.
- The low level alarm and the high level deviation will clear when the condition clears.
- A button is provided to the user on the Run screens to initiate an automatic refill operation at any time. This button can also be used to abort a refill operation.

Refill Timeout

The refill time-out setting may be set by the user as a means to abort the refill in the case of a high level sensor failure. When an automatic refill begins, the time-out counter will begin to count down. If the timer expires before the high level sensor is triggered, the refill will abort. A refill must be manually started to enable auto refills again.

Refill Sensor Type

The Low-Temp Sensor setting limits tank temperatures to 150°F (66°C). And the High-Temp Sensor setting limits tank temperatures to 190°F (88°C).

NOTICE

If you are using low temperature sensors and select the High-Temp Sensor setting and set the temperature above 150°F (66°C), damage to the level sensors will occur.

Conditioning Screen 1

This screen allows the user to select which temperature conditioning components are installed in the system.

Check the box next to the component type for the appropriate side of the system to indicate that a component is installed. A maximum of four components and two monitoring zones may be selected.

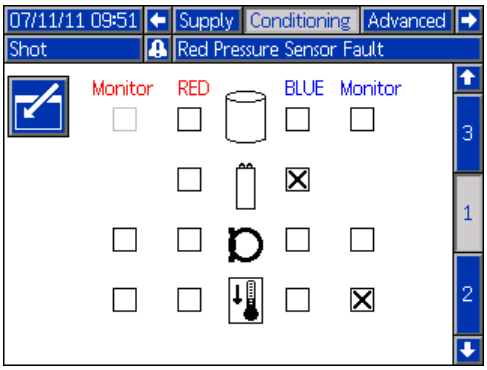

Conditioning Screen 2

This screen shows the fluid path for the temperature conditioning components and temperature setpoints for each component.

NOTE: If tank blanket heaters or inline heaters are installed along with hose heat, the hose heat setting will be limited to at or below the inline or tank heat setting.

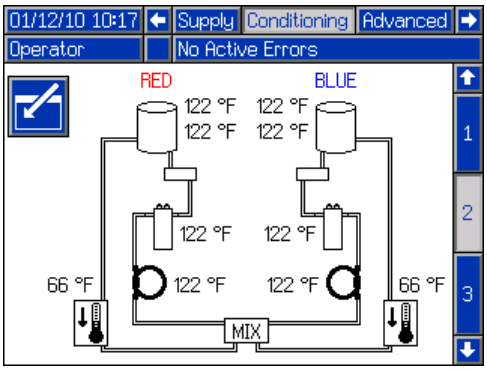

NOTE: All components are shown installed for reference only. Only 4 components and two monitoring zones can be installed at one time.

To edit the temperature setpoint and alarms for a particular component:

1. Press then use the arrow keys to navigate to the component you wish to edit.

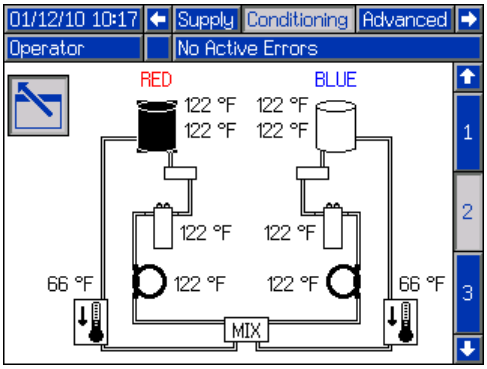

2. Press to display the setpoint and alarm values associated with that component.

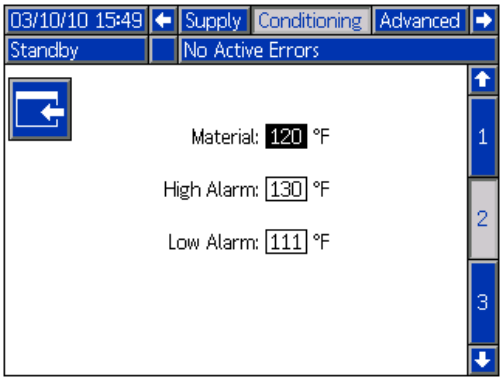

3. Edit the setpoint and alarm values and then press to return to **Conditioning Screen 2**.

NOTE: The high alarm and low alarm values must be at least +/-9°F (5°C) than the material temperature value.

Conditioning Screen 3

This screen allows the user to configure Night Mode operation. In Night Mode, the system will cycle on and off periodically or turn on at a preset time. Press and select periodic or time schemes.

When the system is in Night Mode and in an “On” cycle, the system will circulate in low pressure. The installed conditioning zones will be on and controlling to their respective setpoints. When the system is in Night Mode and in an “Off” cycle, the system will be idle. The system will not be circulating and the conditioning zones will not be actively controlling temperature. When in Night Mode, supply tanks will not fill.

Periodic Night Mode Conditioning Screen

This screen allows the user to set the on and off times of the machine in one minute intervals.

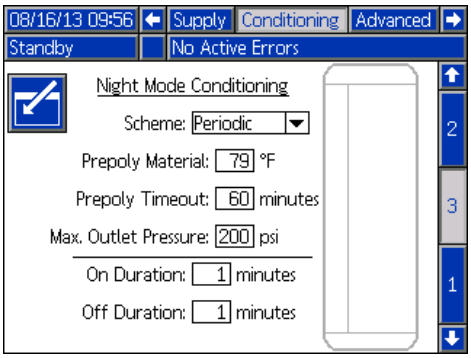

Time Based Night Mode Conditioning Screen

This screen allows the user to set a specific time each day to turn the machine on or off. The times can be set on or off by either each day separately, Monday through Friday where each day has the same on or off times, or Sunday through Saturday where each day has the same on or off times.

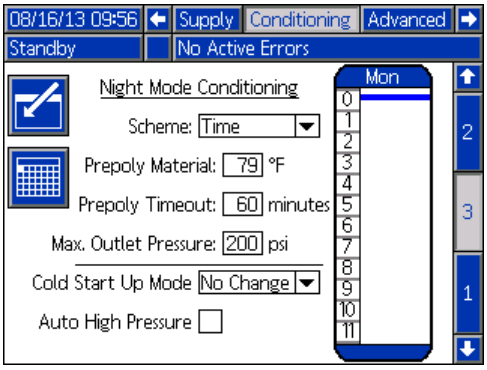

To set the on/off machine times:

1. Press to enter the screen
2. Press left or right arrow keys to highlight the day selection column. Continue to press the left or right arrow keys to select the desired day, work week (Monday thru Friday), or full week (Sunday thru Saturday) duration.
3. Press the up or down arrow keys to select the desired hour to schedule the on or off machine times.
4. Press to enter the selected hour and select the desired time (15 minute increments) for either machine on or off to occur.
5. Press and select either on or off for the time duration selected.

Bar Color	Description
Green	Machine is ON
Red	Machine is OFF
Blue	Machine PrePoly Refresh Start

6. To erase times, repeat steps 1 thru 3 and press once the desired time duration has been selected.

NOTE: If times are entered in the weekly schedule, individual days can not be erased.

NOTE: Set the Prepoly Timeout one minute beyond the time it takes for the material to reach the middle sensor.

Cold Start Up Mode

Allows the user to select what mode the machine will enter once the cold start-up is complete. Selecting no change will leave the machine in either standby or night modes circulating at the set low pressure percentage.

Auto High Pressure

Changes the machine to high pressure circulation when the mode is changed from either standby or night modes.

Calender Time Based Night Mode Conditioning Screen

This screen shows a summary of Time Based Night Mode on or off times that were set by the **Time Based Night Mode Conditioning Screen**.

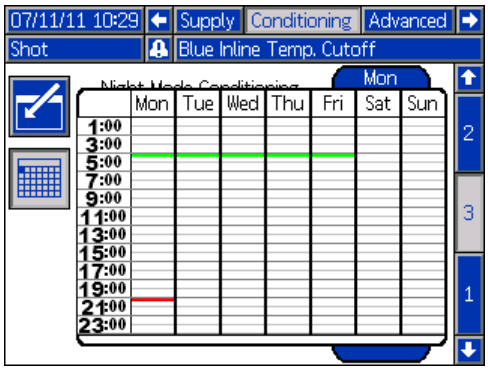

Advanced Screen 1

This screen allows the user to set the language, date format, current date, time, setup screens password, screen saver delay, and turn on or off silent mode.

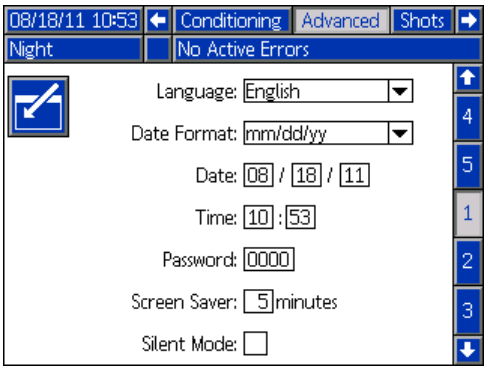

- **Time:** formatted in 24 hour time.
- **Password:** Enables the setup screens to be password protected. Entering “0000” disables the feature.
- **Screen Saver:** Enter the amount of time until the backlight turns off. Entering “0” leave it constantly on.
- **Silent Mode:** Check this box to turn off the buzzer for key presses.

Advanced Screen 2

This screen allows the user to set the units of measure.

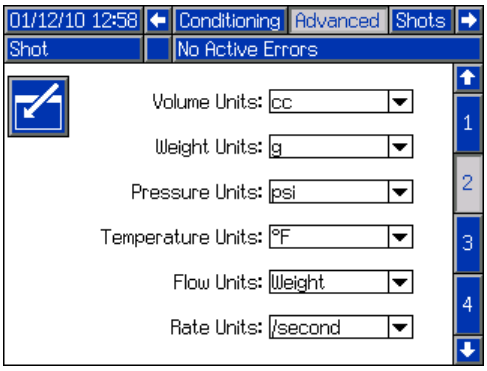

Advanced Screen 3

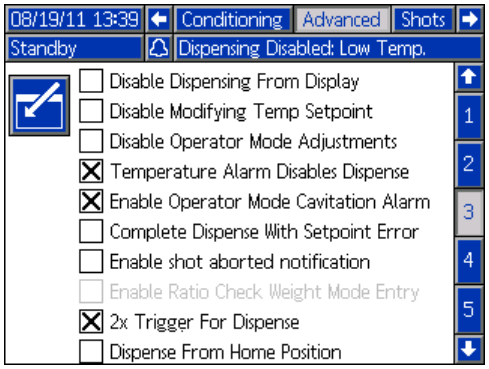

This screen allows the user to control the availability of some key system features.

- **Disable Dispensing From Display:** Check this box to disable dispensing from the ADM. A footswitch, dispense valve trigger, or other external signal will be the only way to initiate a dispense.
- **Disable Modifying Temp Setpoint:** Check this box to disable modifying temperature setpoints from the Run screens. This is only applicable if temperature control items are installed and enabled.
- **Disable Operator Mode Adjustments:** When this box is checked, the user will not be able to adjust the dispense settings in Operator Mode.
- **Temperature Alarm Disables Dispense:** When this box is checked, the system will reject dispense requests when any enabled heat/chiller zones are below/above their setpoint.
- **Enable Operator Mode Cavitation Alarm:** Check this box to enable cavitation alarms in Operator Mode. Clear this box to disable cavitation alarms in Operator Mode.
- **Complete Dispense with Setpoint Error:** When this box is checked, the shot will continue dispensing even if the system never reaches the desired setpoint.
- **Enable Shot Aborted Notification:** When this box is checked, a pop-up notification will be displayed when a shot is aborted.
- **2x Trigger For Dispense:** When this box is checked, the machine will require a double trigger pull to initiate dispensing in shot or sequence mode.
- **Dispense from Home Position:** When this box is checked, the machine will be required to reach a defined home position before dispensing in shot or sequence mode.

Advanced Screen 4

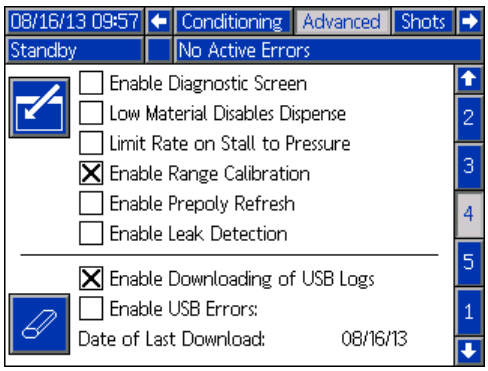

- **Enable Diagnostic Screen:** Check this box to enable the optional ADM screens, enabling USB log downloading, and erasing USB logs. For more information about USB operation, see **Appendix F - USB Operation** on page 89. For more information about the optional screens, see **Diagnostic** screen on page 74.
- **Low Material Disables Dispense:** When this box is checked, the current dispense will terminate and prevent additional dispenses when the supply system indicates a low level.
- **Limit Rate on Stall to Pressure:** Check this box to enable Limit Rate on Stall to Pressure. This will slow the rate of pressure rise on a stall to pressure system.
- **Enable Range Calibration:** Check this box to enable Range Calibration. This creates a range of shot offsets in a table based on the size of the shot. The user must calibrate each range at the specified flow rate. If the flow rate is changed, the table must be recalibrated.
- **Enable PrePoly Refresh:** Check this box to enable Prepoly Refresh. A Prepoly refresh will initiate a cold start, heat the system to a specified temperature (**Conditioning Screen 3**), empty the prepoly tank to the low level sensor and refill the tank. When enabled, either the user may initiate a refresh manually or through a scheduled task.
  - **Night Mode, Disabled, or Standby Modes:** Automatic refills are disabled. If the material level drops below the low level sensor, a low level alarm is thrown.
  - **Shot, Operator or Sequence Modes:** The system will monitor the amount of automatic refills requested after the last shot has been taken. If the system sees two refills without dispensing, the system will generate a leak detection warning and disable the system. The system must be completely powered down to clear the error.
- **Enable Leak Detection:** Check this box to enable Leak Detection. Leak detection is intended for catastrophic leaks only. It requires a Graco auto fill control to be enabled and working. Leak detection is not active during dispense.

Advanced Screen 5

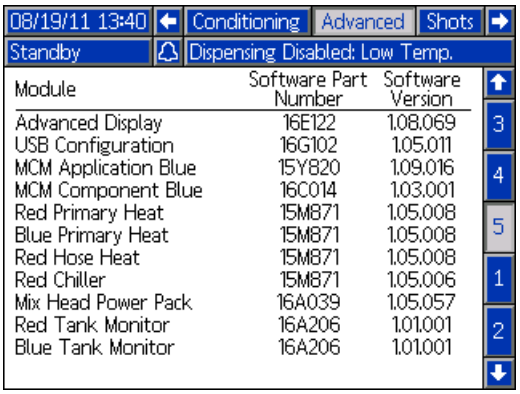

Numbers shown are for reference only and may be different on your system.

This screen displays software information.

Appendix C - ADM Run Screens Overview

Run screens are divided into five major sections: status, errors, events, and maintenance. The following diagram demonstrates the flow of the Run screens beginning with the Home screen.

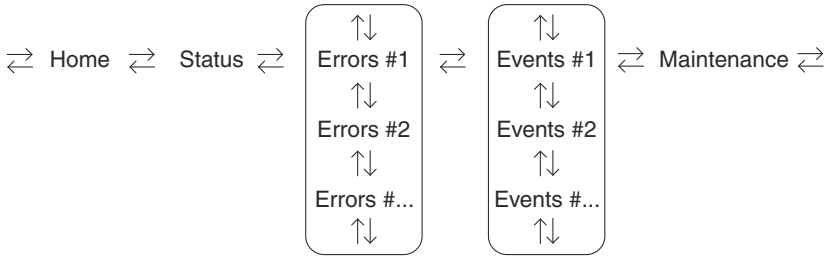

FIG. 28: Run Screens Navigation Diagram

Home Screen

The Home screen is the first screen that displays in the Run screens. It shows the current fluid pressure on the A (Red) and B (Blue) fluid outlets of the pump and if there are any active errors. If tanks are installed in the system, the fill level is shown on each tank. The ratio is also displayed as either Red:1 or Blue:1 depending on which display has been setup. See **System Screen 3** on page 61.

To select an operating mode, press repeatedly until the desired mode is shown then press to select the mode. Alternately, press and use the up and down arrow keys until the desired mode is shown, then press to select the mode. The available operating modes are operator, sequence, shot, standby, night, and disabled.

Home Screen, Disabled Mode

When this mode is selected, the machine will not be able to dispense or condition (heat/cool) material. The setup screens cannot be accessed while in Disabled mode. Use the Select mode button to exit Disabled mode.

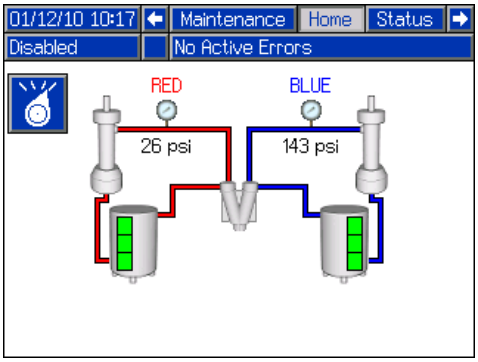

Home Screen, Standby Mode

In Standby Mode, the user can enable heating, park the pumps, refill the tanks, circulate materials.

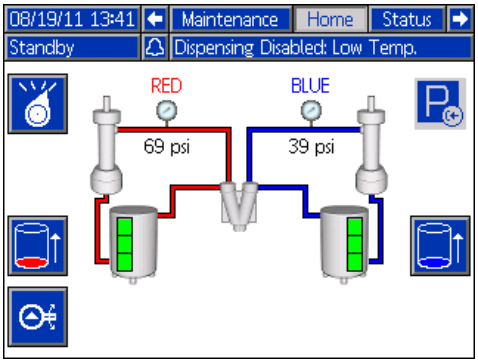

Press to change operating modes.

Press to move the pumps all the way to the left and turns the hydraulic power pack off.

Press or to initiate a tank refill. If a tank is filling, pressing either button will abort the filling operation.

Press to stop or start the hydraulic power pack and run the start-up process.

Home Screen, Shot Mode

This mode allows the user to select one of 100 predefined shot numbers. See **Shots Screen** on page 55 for information about editing shot definitions.

To use a predefined shot:

1. Enter shot mode.
2. Press 1 and use the numeric keypad to enter the desired shot number.
3. Press to select the shot number.
4. Press to initiate a dispense. The system will go to high pressure mode and dispense a shot after the pre-dispense timer, see **Mix Head Operating Details Screen** on page 61, expires.

NOTE: There is a three second delay after a dispense before another dispense can be initiated

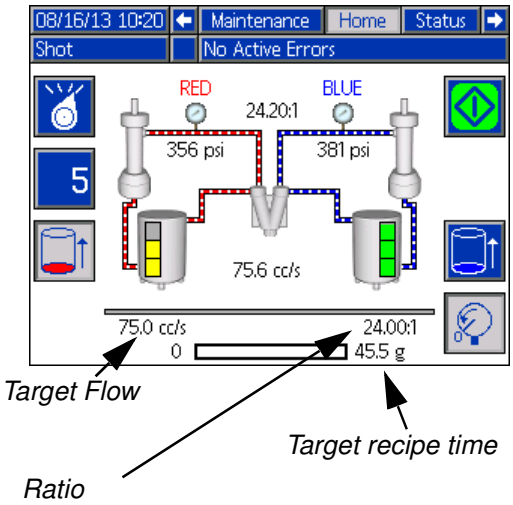

5. Press to switch between low and high pressure modes without dispensing.
6. During a dispense, press to abort the dispense.
7. See **Home Screen, Standby Mode** on page 70 for other button functions.

Home Screen, Sequence Mode

This mode allows the user to select one of five sequences (A-E). The progress bar on the bottom of the screen shows the progress of a shot dispensing from the selected sequence. See **Sequences Screen** on page 58 for information about editing sequence definitions.

NOTE: There is a three second delay after a dispense before another dispense can be initiated.

To use a predefined sequence:

1. Enter Sequence Mode.
2. Press the sequence letter/position selection button.
3. Use the left and right arrows to toggle between letter and position selection. When selecting a sequence letter (A-E), use the up and down arrow keys to scroll through the available letters. When selecting a sequence position, type in the desired position with the numeric keypad. The system will reject invalid letter/position selections.
4. Press to accept the sequence letter/position.
5. Press the Dispense button to begin dispensing.

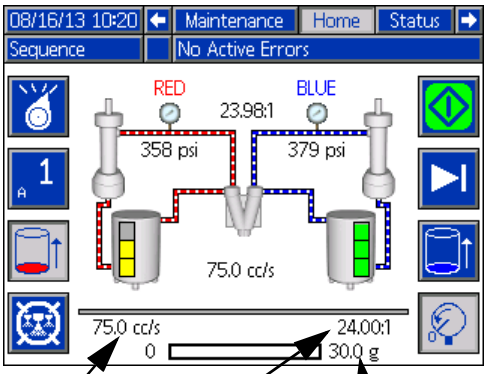

Target Flow/Pressure

Ratio

Target dispense amount (time/volume/weight depending on Dispense Mode)

6. Press to skip to the next sequence position.
7. Press to abort the sequence.
8. See **Home Screen, Shot Mode** on page 70 for other button functions.

Home Screen, Operator Mode

This mode allows users to set a flow rate to dispense material without using predefined shot information.

1. To edit the flow rate, press . The value to change will now be highlighted. Type the new value then press to accept it.

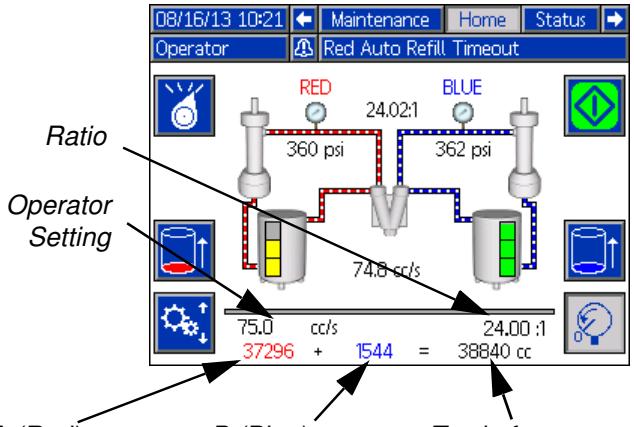

Ratio

Operator Setting

A (Red) resettable material counter

B (Blue) resettable material counter

Total of resettable material counters

2. Press to initiate a dispense. The system will go to high pressure mode and dispense a shot after the pre-dispense timer, see **Mix Head Operating Details Screen** on page 61, expires. Press the to stop the dispense.

NOTE: There is a three second delay after a dispense before another dispense can be initiated.

3. If an external trigger is used, press an hold the trigger to initiate a dispense. Release the trigger to stop the dispense.
4. See **Home Screen, Shot Mode** on page 70 for other button functions.

Home Screen, Night Mode

In Night Mode, the system will cycle on and off periodically or turn on at a preset time. Entering night mode will turn pumps and all conditioning zones off. The circulation on/off cycle begins automatically upon entering Night Mode. See **Conditioning Screen 3** on page 65.

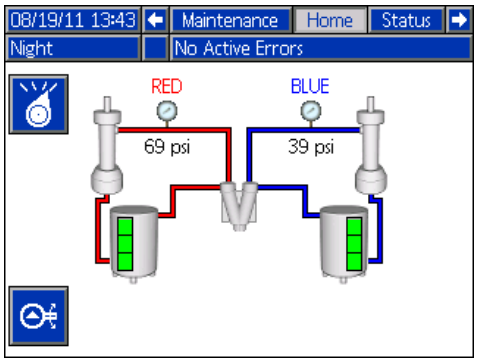

Status Screen

The status screen provides all of the operational functionality of the Home screen except for operating mode selection. Refer to the Home screen and operating mode descriptions for information on this functionality.

In addition to the functionality provided by the Home screen, the Status screen also provides material conditioning information and control.

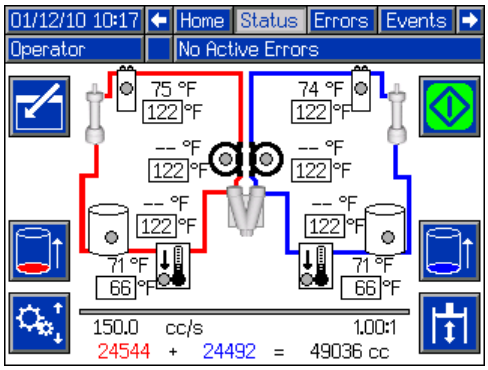

Status Screen, Conditioning Control

This screen allows users to turn on and off heat zones individually or all at once. When a zone is on it is actively controlling temperature. Refer to the table below for color code definitions.

Zone Setting	Color	Definition
OFF	Black	Dispense Disabled
	Grey	Dispense Allowed
ON	Yellow	Dispense Disabled
	Green	Dispense Allowed

To turn a single zone on/off:

1. Press to enter the Conditioning Control screen.
2. Use the arrows keys to navigate to the desired zone.
3. Press to turn on the selected zone. When a zone is on, the button will be selected. Press the button again to turn off the zone.

To turn on/off all zones:

1. Press to enter the Conditioning Control screen.
2. Press the to turn on all zones. When one or more zones are on, the button will be selected. Press the button again to turn off all zones.

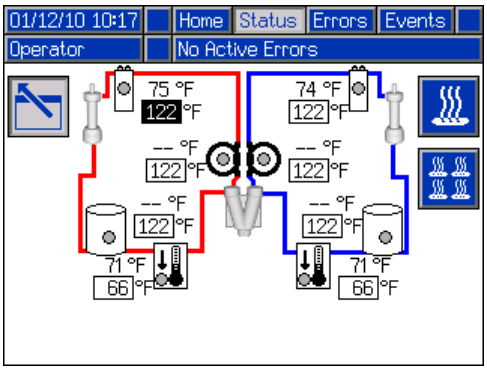

All zones shown for reference. Only four zones may be active at one time.

Errors Screens

This screen shows users a list of errors that have occurred in the system. Each error entry includes a description and error code along with a date and time stamp. There are 5 pages, each holding 10 errors. The 50 most recent errors are shown.

Refer to the **Troubleshooting** section on page 49 for a detailed description of all of the system errors.

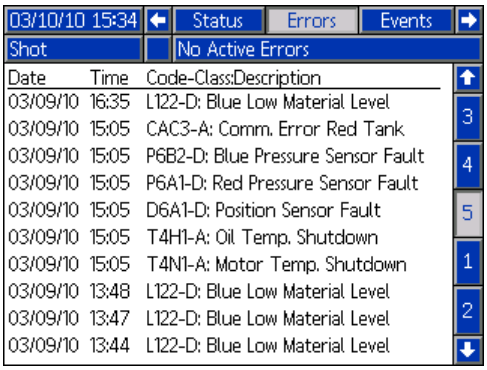

Events Screens

This screen shows users a list of events that have occurred in the system. Each event includes a description and event code along with a date and time stamp. There are 20 pages, each holding 10 events. The 200 most recent events are shown.

Refer to the **Troubleshooting** section on page 49 for a detailed description of all of the system events.

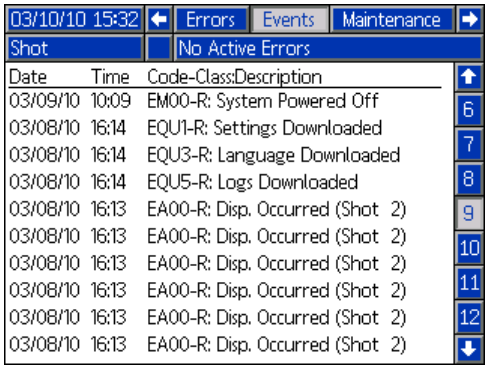

Maintenance Screen

This screen displays historical information for each pump in the system. The Batch counters are resettable and count both material usage and pump cycles. The Total counters are not resettable by the user. They also count both material usage and pump cycles. For material usage counters, units are displayed next to the volume/weight indicator icons.

To erase a batch counter, press and navigate to the field to be erased. Press to erase that data point. Alternatively, may be pressed to erase all of the batch data points simultaneously.

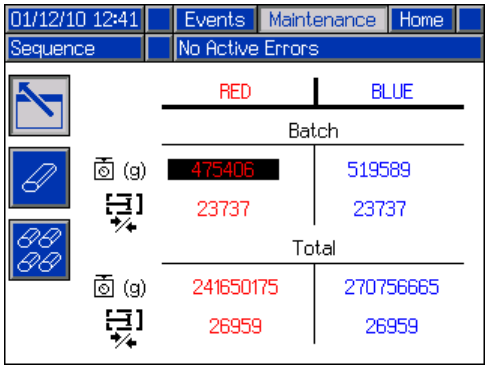

NOTE: In a circulation system, the pumpline must be stopped to erase counters.

Optional Screens

The optional Diagnostic screen can be enabled in the **Advanced Screen 4** screen, see page 68.

Diagnostic

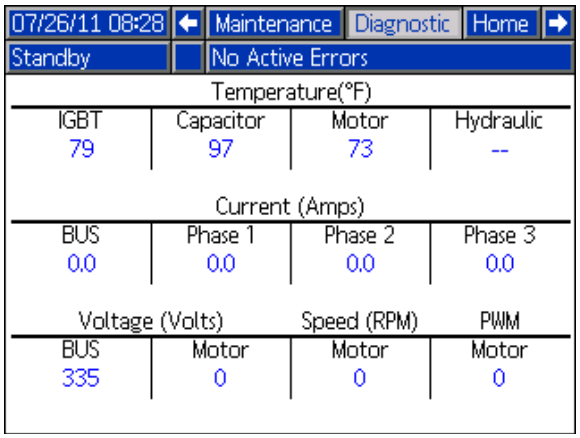

The Diagnostic screen shows status information for various components in the Motor Control Module.

Appendix D - ADM Error Codes

Error Code	Error Name	Error Description	Error Type	Cause	Solution
A4H3	Mix Head Motor Overload	Refer to AC Power Pack manual			
DEH3	Soft Stop Asserted				
MBH3	Low Mix Head Oil Level				
P1H3	Low Accumulator Pressure				
P4H3	High Accumulator Pressure				
T4H3	High Mix Head Oil Temp.				
WDF3	M1 Material Rod Shift Fail				
WDD3	M1 Cleanout Rod Shift Fail				
0500	Invalid Weight Cal. Data	The three point calibration data is invalid, system will operate in weight mode but will attempt to volumetrically calculate weight. This will lead to consistent shots which will be offset for the desired dispense amount.	Deviation	Invalid data	Re-calibrate the machine
02D0	Low Flow Advisory	Pump velocity is too low.	Advisory	Pump flow setpoint is lower than one eighth of the total pump volumes	Increase the pump flow setpoint
A4A6	Red Blanket Overcurrent	An over current was detected on the output	Alarm	Bad heaters	Measure resistance of heater
A4B5	Blue Blanket Overcurrent				
A4A3	Red Inline Overcurrent				
A4B1	Blue Inline Overcurrent				
A4A2	Red Hose Overcurrent				
A4B4	Blue Hose Overcurrent				
A4A7	Red Chiller Overcurrent			High voltage	Measure voltage across the disconnect switch. Voltage should measure between 190 and 264 Vac.
A4B8	Blue Chiller Overcurrent			Shorted Temperature Control Module	If temperature rises for a zone that has been disabled, replace Temperature Control Module
A4H1	Motor Over Current	High current has been detected on a phase and has been shutdown to prevent damage	Alarm	Bad internal wiring of the motor	Replace motor
				Short circuit of motor wiring	Check wiring to the motor to ensure no bare wires are touching and that no wires are shorted to ground
A4M1	Motor Over Current	Too much current is being drawn from the wall	Alarm	Low voltage from the wall during load	Make sure the supply line is properly sized for the load and is above the minimum voltage requirements

Error Code	Error Name	Error Description	Error Type	Cause	Solution
A4N1	Motor Over Current	A hardware current fault has occurred causing a system shutdown	Alarm	Short circuit of motor wiring	Check wiring to the motor to ensure no bare wires are touching and that no wires are shorted to ground
				Motor rotor has become locked	Unplug the directional valve (so pressure will not build) and try to move the motor again. If this succeeds then the power pack may need to be replaced. If the motor is still unable to move, the bearings or hydraulic pump have likely failed in the motor and will need to be replaced.
A7A6	Red Blanket Control Fault	Unexpected current to heater/chiller	Alarm	Shorted Temperature Control Module	If temperature rises for a zone that has been disabled, replace Temperature Control Module
A7B5	Blue Blanket Control Fault				
A7A3	Red Inline Control Fault				
A7B1	Blue Inline Control Fault				
A7A2	Red Hose Control Fault				
A7B4	Blue Hose Control Fault				
A7A7	Red Chiller Control Fault				
A7B8	Blue Chiller Control Fault				
A8A6	No Red Blanket Current	No current to the conditioning zone	Alarm	Tripped circuit breaker	Visually check circuit breaker for a tripped condition
A8B5	No Blue Blanket Current				
A8A3	No Red Inline Current				
A8B1	No Blue Inline Current				
A8A2	No Red Hose Current				
A8B4	No Blue Hose Current			Low power	Measure voltage across input terminals on power line filter. Voltage should measure between 190 and 264 Vac
A8B7	No Red Chiller Current			Cable unplugged/loose power	Check for loose or disconnected wires or plugs
A8B8	No Blue Chiller Current			Bad heater(s)	Measure resistance of heater(s)
A9C1	Motor Over Current	A software error has occurred commanding too much current	Alarm	Bad Motor Control Module code	Check for MCM software update, load latest MCM software, if problem persists contact Graco
B9C0	Small Shot Request	The requested dispense amount is below the minimum amount of the system (25% of the combined pump volumes is the minimum)	Deviation	Pumps are defined with the wrong size	On the ADM go into the Setup screens to the System screens then make sure that the pump sizes are defined correctly
				Requested shot is below the capabilities of the current pump setup	If the user has to be able to take the shot the system must be fitted with smaller pumps
B9C1		The requested dispense amount (time/volume/weight) is below the minimum amount of the system		Short shot size	Increase the time/volume/weight of the shot

Error Code	Error Name	Error Description	Error Type	Cause	Solution
CAA2	Comm. Error Red Hose	Communication error	Alarm	Module missing power	Check power supply connection
CAA3	Comm. Error Red Inline			Module not programmed	Program the module
CAA6	Comm. Error Red Blanket			Module bad	Replace module
CAA7	Comm. Error Red Chiller				
CAB1	Comm. Error Blue Inline				
CAB4	Comm. Error Blue Hose				
CAB5	Comm. Error Blue Blanket				
CAB8	Comm. Error Blue Chiller				
CAC1	Comm. Error Motor				
CAC2	Comm. Error MCM				
CAC3	Comm. Error Red Tank				
CAC4	Comm. Error Blue Tank				
CAC5	Comm. Error Mix Head				
CAC6	Comm. Error Mix Head 2				
CAC7	Comm. Error Ratio Monitor				
CACN	Comm. Error Gateway				
CACP	Comm. Error DGM				
CACR	Comm. Error Remote Pendant				
CUCN	Gateway Heartbeat Error	Heartbeat Error	Alarm	PLC is not maintaining heartbeat	Ensure PLC is triggering the heartbeat
				Module missing power	Check power supply connection
				Module not programmed	Program the module
				Module Bad	Replace module
D1A1	Setpoint Not Reached	The set point was not reached and the pump was shutdown	Deviation	Material restriction too high for requested flow	Reduce flow request
D4A1	Setpoint Exceeded	The maximum cycles per minute of the pump has been exceeded	Deviation	Restriction for the pump is not sufficient	Increase the restriction or lower the set point
D2A1	Setpoint Not Reached	The set point was not reached	Deviation	Pump cannot reach the requested pressure	Increase restriction in the system
				Pump cannot reach the requested flow	Decrease restriction in the system
D3A1	Setpoint Exceeded	The set point was exceeded	Deviation	System underwent a change that caused a large drop in restriction (such as new orifices)	Erase learned System Data, found in the setup screens under calibration
				No material in pumps	Make sure the material lines are open and have proper feed pressure

Error Code	Error Name	Error Description	Error Type	Cause	Solution
D5A1	Invalid Learn Mode Data	This calibration lets the MCM know where the ends of the pump are. If the data gathered during this process is outside of normal parameters the machine will operate with a greatly reduced stroke.	Deviation	Recalibrate the machine	Rerun the learn mode calibration
				Loose/bad connection	Check to ensure the pressure transducer is properly installed and all wires are properly connected
				Bad linear position sensor	Verify pump moves to limits, if problem persists replace linear position sensor
D6A1	Position Sensor Fault	The linear position sensor is returning data that should not be possible during normal operation	Alarm	Loose/bad connection to linear position sensor	Check to ensure the linear position sensor is properly installed and all wires are properly connected
				Bad linear position sensor	Replace linear position sensor
				Linear position sensor may be loose where attached to pump housing	Re-tighten the sensor and re-calibrate the machine
DDA1	Red Pump Cavitation	Cavitation was detected on the given pump	Deviation	Insufficient material being supplied or insufficient material pressure on feed system	Verify that incoming ball valves are open
DDB2	Blue Pump Cavitation				Verify that feed pumps are supplying material
				Debris or packout in the incoming fluid filter	Inspect filter for debris of filler packout and clean or replace as necessary
DFA1	Pump Not Parked	The pump failed to reach the park position	Deviation	Orifices blocked	Clear blockage
				Hose blocked	Clear or replace hose as necessary
				Dispense valve failed to open	Check to make sure the dispense valve is properly configured and connected to the MCM
DR6A	Check Flow Meter Red	Flow Meter has caused a fault	Deviation	Cogs in flow meter are not turning	Check that flow meter is matched to nominal pump output
DR6B	Check Flow Meter Blue			Cable unplugged/loose power	check of loose or disconnected wires or plugs
DSC0	Pumps Not Defined	The type or size of the Red or Blue material pumps have not been defined	Alarm	Properly setup the system	On the ADM go into the setup screens -> System-> then make sure that the pump type and size are set (not --)
F1A0	Low Flow Red	Flow is below the defined low limit	Alarm	Cogs in flow meter are not turning	Check that flow meter is matched to nominal pump output
F2A0			Deviation		
F1B0	Low Flow Blue		Alarm	Cable unplugged/loose power	Check for loose or disconnected wires or plugs
F2B0			Deviation		
F4A0	High Flow Red	Flow is above the defined low limit	Alarm	Cogs in flow meter are turning rapidly	Check that flow meter is matched to nominal pump output
F3A0			Deviation		
F4B0	High Flow Blue		Alarm		
F3B0			Deviation		
F7D1	Pump Failed to Stall	When the pump tried to stall to pressure the pump traveled more than it should in normal operation (only applies to dead-headed system)	Deviation	Failure of the dispense valve	Ensure the valve has a proper air supply and seals properly. If not, service the valve as necessary.
				Material leak	Visually inspect the machine and hoses for sign of leakage. **NOTE:** This error will display after 2 full piston strokes so the leak will be substantial.
				Out of material	Fill tanks
L111	Red Low Material Level	Low material level in tanks	Deviation	Tanks low on material	Fill tanks with material
L122	Blue Low Material Level			Loose/broken connection	If the tanks appear to have plenty of material check to make sure the level sensor is connected to the proper port and that the cord is not damaged
				Bad level sensor	Replace level sensor
L311	Red High Material Level	High material level in tanks	Deviation	Defective fill valve	If the tanks appear to have plenty of material check to make sure the level sensor is connected to the proper port and that the cord is not damaged
L322	Blue High Material Level				
L6A1	Red Auto Refill Timeout	The tank stand has been filing for a time greater than expected	Deviation	No material is actually being fed	Make sure the feed pumps are operating properly
L6B2	Blue Auto Refill Timeout			Loose level sensor connection	Check for loose or disconnected wires or plugs
				Bad level sensor	Replace level sensor

Error Code	Error Name	Error Description	Error Type	Cause	Solution
L8A1	Red Tank Sensor Failure	A level sensor had ceased working	Deviation	Bad level sensor	Replace level sensor
DR6B	Blue Tank Sensor Failure				
L9AX	Red Tank Leak Detected	A tank or material line is leaking	Alarm	Two tank refills occur without a dispense	Check all hoses and pumps for material leaks
L9BX	Blue Tank Leak Detected				
L9A0	Prepoly Refresh Time Expired	Prepoly refresh took longer to complete than normal	Alarm	No material is sensed by the second level sensor within an allotted amount of time	Check for an obstructions within the material supply line
MBH1	Low Oil Level	The volume of oil in the tank is below the minimum level needed for the system to properly operate	Alarm	Low oil level	Check oil level and if low add more hydraulic fluid
				Loose/bad connection	Check to ensure the hydraulic oil level sensor is properly connected to the MCM and that the wire has not been damaged
				Bad level sensor	Replace sensor
				Leak in hydraulic driver	Inspect hydraulic driver end seals and early leak detection tubing. Replace seals as necessary and replace lost oil.
				Leak in the hydraulic reservoir, heat exchanger	Inspect the hydraulic reservoir fittings and filter for leaks. Repair or replace as necessary and replace lost oil.
MBN1	Low Motor Performance	The motor magnetism has decreased to the point where performance is greatly reduced	Advisory	Prolonged exposure to heat or high voltage	If error persists and performance can no longer satisfy the user requirements the motor will need to be replaced
MMUX	USB Logs Full	USB log has reached the maximum entries	Advisory	USB logs have not been downloaded	Download USB logs to a memory stick
					Uncheck the Enable USB errors on Advanced screen 4
N1D0	Material Dispense Below Alarm	Material dispense is below the defined limit	Alarm	Cogs in flow meter are not turning	Check that flow meter is matched to nominal pump output
N2D0	Material Dispense Below Deviation		Deviation		
N3D0	Material Dispense Above Deviation	Material dispense is above the defined limit	Deviation	Cable unplugged/loose power	check for loose or disconnected wires or plugs
N4D0	Material Dispense Above Alarm		Alarm		

Error Code	Error Name	Error Description	Error Type	Cause	Solution
N4A1	Pump Failed to Move	The MCM attempted to move the pump but no movement was detected	Deviation	Motor failure	Visually check to ensure the pump is moving, if not ensure the motor is wired properly
				Hydraulic power pack failure	If motor is moving but pump is not and pressure is not building they hydraulic power pack may need servicing
				Loose/bad connection to the linear position sensor	Check to ensure the linear position sensor is properly connected to the MCM and the wiring has not be damaged
				Failure of the linear position sensor	Replace the linear position sensor
				Motor no longer coupled to hydraulic pump	Reset coupler per specifications and retighten set screws
				Supply tube from hydraulic pump to manifold is loose or broken	Retighten or replace supply tube
				Broken motor shaft	Replace motor
				Over-pressure valve dumping to tank	Verify that no outside forces are stopping the pump from moving, then inspect over-pressure valve for damage or debris
P400	Thermal Pressure Rise	Pressure has risen to an unsafe level due to thermal expansion of materials. All conditioning zones have automatically been turned off.	Deviation	High pressure	Open the dispense valve manually or open the valves to bleed pressure
P4A1	Red Pressure Shutdown	The material pump pressure exceeded the maximum operating pressure as defined in the setup screens	Alarm	Dispense valve failed to open	Check to make sure the dispense valve is properly configured and connected to the MCM
P4B2	Blue Pressure Shutdown			Bad dispense valve	Replace dispense valve
				Restriction in the material lines	Check to ensure there is no blockage
				Invalid maximum pressure defined	Make sure the requested pressure is within the max operating pressure, which can be found on the setup screen System 1
				Orifices blocked	Clear blockage
				Hose blocked	Clear blockage or replace hose as necessary
				Dispense valve failed to open	Check to make sure the dispense valve is properly configured and connected to the MCM
P4D0	Pressure Imbalance	The pressure difference between the Red and Blue material is greater than the defined amount	Alarm	Dispense line is clogged	Ensure the material flow is equally restricted on both material lines
				Pressure imbalance is defined too low	On the ADM go into the setup screens -> System-> and ensure the pressure imbalance value is the maximum acceptable to prevent unnecessary alarms which will abort dispenses
				Orifice blocks closed off too much on one or both sides	Verify that one or both of the orifice blocks dispense when adjusted to the fully open position then adjust accordingly
				Debris in the orifice block	Relieve system pressure then remove the orifice from the orifice block and inspect for debris in the cavity
				Material fillers may have packed out in an orifice	Relieve system pressure and remove the orifice from the orifice block and inspect for pack out. Clean or replace as necessary.
				Out of material	Fill tanks with material
				Feed system defective	Replace defective item
P6A1	Red Pressure Sensor Fault	The pressure sensor is providing invalid/no pressure readings	Alarm	Loose/bad connection	Check to ensure the pressure transducer is properly installed and all wires are properly connected
P6B2	Blue Pressure Sensor Fault		Alarm	Bad sensor	Replace pressure transducer
				No material in pump	Fill tanks

Error Code	Error Name	Error Description	Error Type	Cause	Solution
R1D0	Low Ratio Alarm	Ratio monitor has detected an out of ratio condition	Alarm	Material A to Material B is out of ratio	Check feed system
R4D0	High Ratio Alarm				
R2D0	Low Ratio Deviation		Deviation		
R3D0	High Ratio Deviation				
T1A6	Red Tank Low Fluid Temp.	Fluid temperature is below the defined low alarm limit	Alarm	Tripped circuit breaker	Visually check circuit breaker for a tripped condition
T1B5	Blue Tank Low Fluid Temp.				
T1A3	Red Inline Low Fluid Temp.				
T1B1	Blue Inline Low Fluid Temp.				
T1A2	Red Hose Low Fluid Temp.				
T1B4	Blue Hose Low Fluid Temp.			Low power	Measure voltage across input terminals on power line filter. Voltage should measure between 190 and 264 Vac
T1A7	Red Chiller Low Fluid Temp.			Cable unplugged/loose power	Check for loose or disconnected wires or plugs
T1B8	Blue Chiller Low Fluid Temp.			Bad heater(s)	Measure resistance of heater(s)
T20X	Dispensing Disabled Low Temp	Dispensing disabled because of temperature	Advisory	Temperature is out of alarm limits	Check temperature alarm limits
T30X	Dispensing Disabled High Temp				

Error Code	Error Name	Error Description	Error Type	Cause	Solution
T2AA	Red Hose Low Fluid Temp.	Fluid temperature for a monitor zone is below the defined low alarm limit	Deviation	Temperature is out of alarm limits	Check temperature alarm limits
T2AE	Red Tank Low Fluid Temp.				
T2AF	Red Chiller Low Fluid Temp.				
T2BC	Blue Hose Low Fluid Temp.				
T2BD	Blue tank Low Fluid Temp.			Cable unplugged/loose power	Check for loose or disconnected wires or plugs
T2BG	Blue Chiller Low Fluid Temp.				
T3AA	Red Hose High Fluid Temp.	Fluid temperature for a monitor zone is above the defined high alarm limit			
T3AE	Red Tank High Fluid Temp.				
T3AF	Red Chiller High Fluid Temp.			Inline heater is not turned on	Turn on inline heater
T3BC	Blue Hose High Fluid Temp.				
T3BD	Blue Tank High Fluid Temp.				
T3BG	Blue Chiller High Fluid Temp.				
T3H1	Oil Temp. Cutback	The hydraulic oil temperature is approaching a level where damage is possible so the Motor Control Module is limiting the output to a safe level	Deviation	No power to fan	Check cord to make sure fan has power
				Debris is fan or fan grill	Clear debris from fan/fan grill
				Low air volume from fan	Try to stop fan by lightly pressing on the center with a pencil eraser. If the fan slows down easily it will need to be replaced
T3N1	Motor Temp. Cutback	Motor temperature is approaching a level where damage is possible so the motor control module is limiting the output to a safe level	Advisory	No power to fan	Check cord to make sure fan has power
				Debris is fan or fan grill	clear debris from fan/fan grill
				Low air volume from fan	Try to stop fan by lightly pressing on the center with a pencil eraser. If the fan slows down easily it will need to be replaced
				Ambient environmental conditions are too hot	Move machine to an area below 120°F
				Motor/pump coupler may be rubbing on hydraulic pump	Reset coupler per specifications and retighten set screws

Error Code	Error Name	Error Description	Error Type	Cause	Solution
T4A2	Red Hose High Fluid Temp.	Fluid temperature is above the defined high alarm limit	Alarm	Defective Temperature Control Module	Replace Power Temperature Control Module
T4A3	Red Inline High Fluid Temp.				
T4A6	Red Tank High Fluid Temp.				
T4A7	Red Chiller High Fluid Temp.				
T4B1	Blue Inline High Fluid Temp.				
T4B4	Blue Hose High Fluid Temp.				
T4B5	Blue Tank High Fluid Temp.			Defective RTD	Replace RTD
T4B8	Blue Chiller High Fluid Temp.			Loose connections	Tighten connections
T4C1	Motor Control High Temp.	The temperature the MCM has reached a level where product life will be decreased drastically and has been shutdown for protection	Alarm	No power to fan	Check cord to make sure fan has power
				Debris is fan or heatsink	Clear debris from fan or heatsink
				Low air volume from fan	Try to stop fan by lightly pressing on the center with a pencil eraser. If the fan slows down easily it will need to be replaced
				Motor may be damaged	Replace motor
				Debris is packed in the MCM's heat sink fins	Clear debris from MCM heat sink fins
T4H1	Oil Temp. Shutdown	The hydraulic oil is at a temperature where performance is impacted significantly and has resulted in a system shutdown	Alarm	No Power to Fan	Check cord to make sure fan has power
				Debris in fan or fan grill	Clear debris from fan/fan grill
				Low air volume from fan	Try to stop fan by lightly pressing on the center with a pencil eraser. If the fan slows down easily it will need to be replaced
T4N1	Motor Temp. Shutdown	Motor temperature is too high and system has been shutdown to prevent possible damage	Alarm	No power to fan	Check cord to make sure fan has power
				Debris is fan or fan grill	Clear debris from fan/fan grill
				Low air volume from fan	Try to stop fan by lightly pressing on the center with a pencil eraser. If the fan slows down easily it will need to be replaced
				Ambient environmental conditions are too hot	Move machine to an area below 120°F
				Motor may be damaged	Motor may need to be replaced
T6A6	Red Tank RTD Fault	RTD 1 is giving no or invalid data	Alarm	Loose or bad connection	Check RTD wiring
T6B5	Blue Tank RTD Fault				
T6A3	Red Inline RTD Fault				
T6B1	Blue Inline RTD Fault				
T6A2	Red Hose FTS Fault				
T6B4	Blue Hose FTS Fault				
T6A7	Red Chiller RTD Fault				
T6B8	Blue Chiller RTD Fault			Bad RTD	Replace RTD

Error Code	Error Name	Error Description	Error Type	Cause	Solution
T6C6	Red Blanket RTD Fault	RTD 2 is giving no or invalid data	Alarm	Loose or bad connection	Check RTD wiring
T6C5	Blue Blanket RTD Fault				
T6C7	Red Chiller RTD Fault				
T6C8	Blue Chiller RTD Fault			Bad RTD	Replace RTD
T8A6	No Heat Red Tank	No temperature rise	Deviation	Tripped circuit breaker	Visually check circuit breaker for a tripped condition
T8B5	No Heat Blue Tank				
T8A3	No Heat Red Inline				
T8B1	No Heat Blue Inline			Low Power	Measure voltage across input terminals on power line filter. Voltage should measure between 190 and 264 Vac
T8A2	No Heat Red Hose			Cable unplugged/loose power	Check for loose or disconnected wires or plugs
T8B4	No Heat Blue Hose			Bad heater(s)	Measure resistance of heater(s)
T8A7	No Cooling Red Chiller	No temperature decline	Deviation	Tripped circuit breaker	Visually check circuit breaker for a tripped condition
T8B8	No Cooling Blue Chiller			Defective cooling valve	Disconnect the valve and measure the voltage across the wires when the chiller is running to ensure 24V is being delivered to the valve. If so, the cooling valve will likely need replacing.
				Chilled water supply off	Turn on chilled water supply
				Loose or bad connection	Check RTD wiring
T9A6	Red Blanket Temp. Cutoff	Heater overtemperature cutoff	Alarm	Defective RTD	Replace RTD
T9B5	Blue Blanket Temp. Cutoff				
T9A3	Red Inline Temp. Cutoff			Defective High Power Temperature Control Module	Replace High Power Temperature Control Module
T9B1	Blue Inline Temp. Cutoff			Loose connections	Tighten connections
T9C6	Red Blanket Ctrl Shutdown	PCB over temperature	Alarm	Overheated Temperature Control Module	Turn conditioning zone off. Wait a few minutes. If the condition does not clear or regenerates consistently, replace heater module
T9C5	Blue Blanket Ctrl Shutdown				
T9C3	Red Inline Ctrl Shutdown				
T9C1	Blue Inline Ctrl Shutdown				
T9C2	Red Hose Ctrl Shutdown				
T9C4	Blue Hose Ctrl Shutdown				
T9C7	Red Chiller Ctrl Shutdown				
T9C8	Blue Chiller Ctrl Shutdown				

Error Code	Error Name	Error Description	Error Type	Cause	Solution
V1H1	Motor Control Undervoltage	The voltage to the MCM has dropped to a level where performance is greatly affected	Alarm	Tripped circuit breaker	Visually check circuit breaker for a tripped condition
				Supply lines providing low voltage	Check incoming voltage to ensure it is above the minimum operating voltage
V4A6	Red Blanket Overvoltage	High line voltage	Alarm	Incoming line voltage is too high	Measure voltage across disconnect switch. Voltage should measure between 190 and 264 Vac.
V4B5	Blue Blanket Overvoltage				
V4A3	Red Inline Overvoltage				
V4B1	Blue Inline Overvoltage				
V4A2	Red Hose Overvoltage				
V4B4	Blue Hose Overvoltage				
V4A7	Red Chiller Overvoltage				
V4B8	Blue Chiller Overvoltage				
V4H0	Motor Control Overvoltage	The voltage to the MCM has reached an unsafe level and has been shutdown in an attempt to prevent damage	Alarm	Supply lines providing high voltage	Check incoming voltage to ensure it is below the maximum operating voltage
W0U0	USB Update Failed	The ADM tried to upload a system settings file but failed	Alarm	System Settings file is corrupt	Replace the system settings file with a backup or new file
				System Settings file is intended for another system	Ensure that the first line in the settings.txt file contains the text GMS™. If not replace the file with the proper system update file.
WBH1	Motor Encoder Fault	An error has been detected on the motor position sensor	Alarm	Failing sensors	If error persists the motor will need to be replaced
				Loose connection	Ensure the d-sub connector to the motor is connected and the wiring is intact
WDF1	M1 Material Rod Shift Fail	The material rod failed to move on a straight head	Alarm	Stuck material rod	Check that material rod is able to freely move
				No power to directional valve	Make sure the directional valve has power
WKH1	High Motor Speed	The motor has reached a speed that should not be reached in normal operation and was shutdown to prevent possible damage	Alarm	No power to directional valve	Make sure the directional valve has power
				Bad directional valve connection	Make sure the cord to the directional valve is connected to the correct port and the cord is not damaged
				Directional valve failure	The directional valve will need to be replaced
				Hydraulic power pack failure	The hydraulic power pack will need repair
				Defective encoder	Replace encoder
				Motor no longer coupled to hydraulic pump	Reset coupler per specifications and retighten set screws
				Supply tube from hydraulic pump to manifold is loose or broken	Retighten or replace supply tube
				Broken motor shaft	Replace motor

Error Code	Error Name	Error Description	Error Type	Cause	Solution
WM06	Red Tank Con. Fault	High current to relay 1	Alarm	Broken contactor	Replace contactor
WM05	Blue Tank Con. Fault				
WM03	Red Inline Con. Fault				
WM01	Blue Inline Con. Fault				
WM02	Red Hose Con. Fault				
WM04	Blue Hose Con. Fault				
WM07	Red Chiller Con. Fault				
WM08	Blue Chiller Con. Fault				
WMA6	Red Blanket High Temp.	Tank blanket is above the defined high alarm limit	Alarm	Defective RTD	Replace RTD
WMB5	Blue Blanket High Temp.			Defective High Power Temperature Control Module	Replace High Power Temperature Control Module
				Loose connections	Tighten connections
WMC6	Red Tank Con. Fault	Unexpected current to relay 1	Alarm	Shorted module	If temperature is being affected by a zone that has been disabled, replace heat module
WMC5	Blue Tank Con. Fault				
WMC3	Red Inline Con. Fault				
WMC1	Blue Inline Con. Fault				
WMC2	Red Hose Con. Fault				
WMC4	Blue Hose Con. Fault				
WMC7	Red Chiller Con. Fault				
WMC8	Blue Chiller Con. Fault				
WMH1	Motor Controller Fault	A general fault has occurred within the MCM	Deviation	Internal hardware failure	Cycle power, if the error persists the MCM will need to be replaced
WSC0	Invalid Setpoint Request	The requested controlling value (pressure or flow) is outside the limits of the system	Deviation	System incorrectly setup	On the ADM go into the setup screens -> System-> and ensure that all pages have properly defined values
				Shot incorrectly defined	Redefine shot with control parameters within the limits of the system
	Invalid Gel Timer Definition	The shot that was entered for the gel timer is not a valid shot. This must be fixed before the gel timer will function properly	Deviation	Gel timer shot is below the minimum dispense amount or set for a invalid pressure/flow	Select a different shot or modify existing shot data
				The MCM has determined that the gel timer shot will not be able to be executed based parameters entered in the ADM	If you are certain that the shot is within parameters, try running the Learn Mode routine found in the setup screen Calibration. If the error persists, a gel shot with reduced control parameters is required.

Appendix E - System Events

Event Code and String	Triggers
EAA0-R: Prepoly Refresh Started	While in night mode, the prepoly refresh started.
EBA0-R: Prepoly Refresh Complete	While in night mode, the prepoly refresh completed successfully.
EL00-R: System Powered On	The System was powered on.
EM00-R: System Powered Off	The System was powered off.
EB00-R: Stop Button Pressed	The Red stop button was pressed on the Advanced Display Module.
ECH0-R: Learn Mode Executed	A learn mode calibration was successfully completed.
ENN0-R: Automatic Cal. Performed	The system was successfully characterized with the Automatic calibration.
ECA1-R: Red Material SG Modified	The Red materials specific gravity was modified.
ECB2-R: Blue Material SG Modified	The Blue materials specific gravity was modified.
ENC1-R: Cal. Point 1 Weight Entered	A value for the first point in the three point calibration was entered.
ENC2-R: Cal. Point 2 Weight Entered	A value for the second point in the three point calibration was entered.
ENC4-R: Cal. Point 1 Weight Erased	The running average for point one of the three point calibration was erased.
ENC5-R: Cal. Point 2 Weight Erased	The running average for point two of the three point calibration was erased.
END0-R: Ratio Check Dispense	A ratio check shot was dispensed from the ratio check calibration screen.
EA00-R: Disp. Occurred (Shot #)	A dispense has occurred of the given shot number.
EH00-R: Gel Timer Dispense	The gel timer expired and the system automatically took the gel shot.
ER01-R: Shot Count Reset	A counter from the shot counters maintenance page was erased
ER02-R: Seq. Position Count Reset	A counter from the sequence counters maintenance page was erased
ERA1-R: Red Material Volume Reset	The resettable totalizer for the Red material volume was reset to zero.
ERB1-R: Blue Material Volume Reset	The resettable totalizer for the Blue material volume was reset to zero.
ERA2-R: Red Material Weight Reset	The resettable totalizer for the Red material weight was reset to zero.
ERB2-R: Blue Material Weight Reset	The resettable totalizer for the Blue material weight was reset to zero.
ERA3-R: Red Cycle Count Reset	The resettable cycle counter for the Red pump was reset to zero.
ERB3-R: Blue Cycle Count Reset	The resettable cycle counter for the Blue pump was reset to zero.

Event Code and String	Triggers
EQU1-R: Settings Downloaded	The system settings were successfully transferred from the ADM to a USB drive.
REQU-R: Settings Uploaded	The system settings file was successfully transferred from the USB drive to the ADM.
EQU3-R: Language Downloaded	The custom language file was successfully transferred from the ADM to a USB drive.
EQU4-R: Language Uploaded	The custom language file was successfully transferred from the USB drive to the ADM.
EQU5-R: Logs Downloaded	The Error/Event and Shot data logs were successfully transferred from the ADM to a USB drive.
EA0-R: Night Mode Recirc On	While in night mode the system has automatically entered a low circulation mode and attempted to turn on all enabled conditioning zones.
EBR0-R: Night Mode Recirc Off	While in night mode the system has automatically stopped the low circulation mode and turned off all conditioning zones.
EWA0-R: Prepoly Refresh Cancelled	While in night mode, the prepoly refresh was cancelled

Appendix F - USB Operation

Overview

There are 3 main uses for the USB on a GMS system

- Ability to download a log of up to the past 50,000 errors, events, or jobs that can contain over 150,000 snapshots of critical dispense information.
- Ability to download, modify, and upload custom language files
- Ability to download and upload system configurations
  - This data includes most user selectable and user configurable settings.
  - This data does not include pump counters, error and event logs, shot and sequence counters

USB Options

The only options for USB on the ADM are in **Advanced Screen 4**, see page 68.

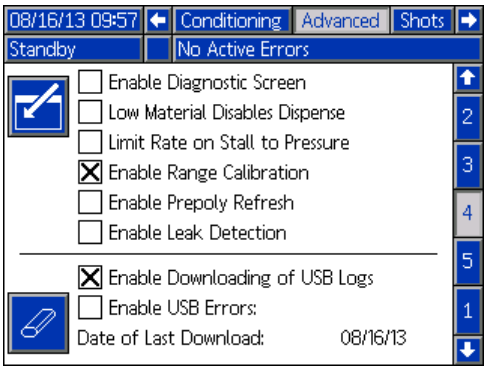

The first option is a checkbox that enables or disables the downloading of the Error Event and Shot Data log files. The Shot Data log runs during all circulation, shots, and operator modes.

The second option is the Erase icon which will reset the last download date to a time where all logs can be downloaded**.** This will allow the user to download all the USB log entries, which may take over 2 hours if the log files are full. Currently the ADM does not monitor the USB logs and alert the user when data may be overwritten so in order to minimize download times and the risk of losing data it is recommended that the user download the logs every 2 weeks or more often if the machine is used during more than one full shift a day.

The third option is a checkbox that enables or disables the ability to record errors associated with the USB logs.

Download Log Files

If the “Enable Downloading of USB Logs” is checked, the user can use a USB stick-drive to download the log files.

NOTICE

Low-quality USB stick drives may lead to burning out the USB port on the ADM. Use only high-quality USB stick-drives with the ADM USB port.

To download the log files, insert a high-quality USB stick-drive into the USB port in the bottom of the ADM. The ADM will automatically begin downloading the log files as well as the custom language file (DISPTEXT.TXT) and the system settings (SETTINGS.TXT). The status of the download will be shown in the Status bar.

Log Files, Folder Structure

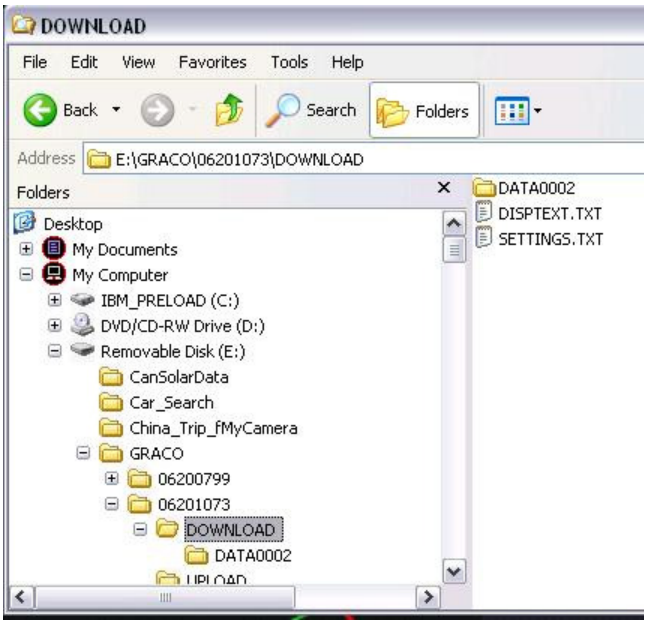

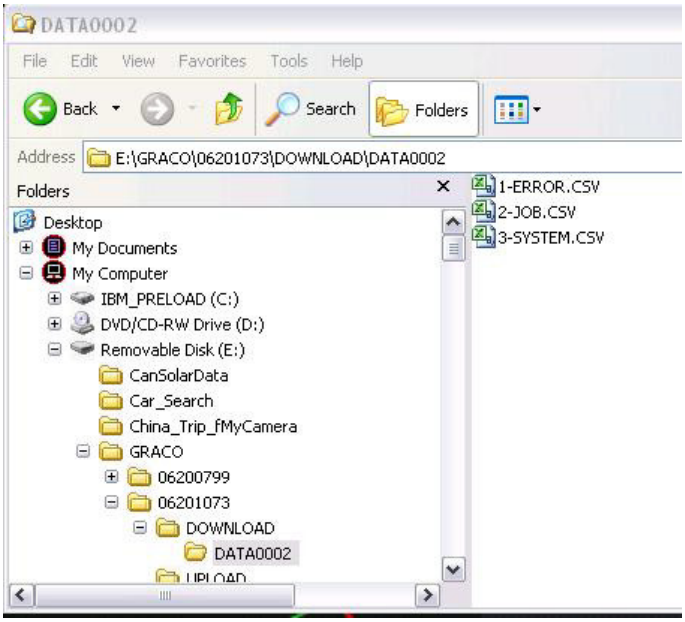

FIG. 29: DOWNLOAD, DATAxxxx Folders

Each time a stick-drive is inserted into the ADM USB port, a new folder named DATAxxxx is created. The number at the end of the folder name is incremented each time a stick-drive is inserted and data is downloaded or uploaded. In each DATAxxxx folder there are three log files. They are formatted as .csv (comma separated value) files and can be opened by most text editors or data processing programs such as Excel.

Example 1-ERROR File

The 1-ERROR file is the Errors and Events log file.

	A	B	C	D	E	F	G
1	Error Log						
2	S/N: 06201073						
3	Software Part Number: 16N420						
4	Software Version: 1.01.002						
5	4/23/2012 11:09						
6							
7	Date	Time	Error Log	Event Log	Active Shot Number		
8	4/11/2012	14:12:17	No Active Errors	EC0X-R:Setup Values Changed	-		
9	4/11/2012	14:13:26	No Active Errors	EC0X-R:Setup Values Changed	-		
10	4/11/2012	14:14:14	No Active Errors	EC0X-R:Setup Values Changed	-		
11	4/11/2012	14:15:00	No Active Errors	EC0X-R:Setup Values Changed	-		
12	4/11/2012	14:17:11	P4D0-A: Pressure Imbalance	No Event	-		
13	4/11/2012	14:17:17	Error Cleared: P4D0-A: Pressure Imbalance	No Event	-		
14	4/11/2012	14:17:31	DDA1-D: Red Pump Cavitation	No Event	-		
15	4/11/2012	14:17:44	DDB2-D: Blue Pump Cavitation	No Event	-		
16	4/11/2012	14:20:18	Error Cleared: DDA1-D: Red Pump Cavitation	No Event	-		
17	4/11/2012	14:20:18	Error Cleared: DDB2-D: Blue Pump Cavitation	No Event	-		
18	4/11/2012	14:20:46	P4D0-A: Pressure Imbalance	No Event	-		
19	4/11/2012	14:20:52	Error Cleared: P4D0-A: Pressure Imbalance	No Event	-		
20	4/11/2012	14:23:59	No Active Errors	EM00-R: System Powered Off	-		
21	4/11/2012	14:24:00	No Active Errors	EL00-R: System Powered On	-		
22	4/11/2012	14:48:47	No Active Errors	EM00-R: System Powered Off	-		
23	4/11/2012	14:48:48	No Active Errors	EL00-R: System Powered On	-		
24	4/11/2012	14:50:03	No Active Errors	EM00-R: System Powered Off	-		
25	4/11/2012	14:50:10	No Active Errors	EL00-R: System Powered On	-		
26	4/11/2012	14:50:18	No Active Errors	EM00-R: System Powered Off	-		
27	4/12/2012	7:51:33	No Active Errors	EL00-R: System Powered On	-		
28	4/12/2012	7:52:35	DDA1-D: Red Pump Cavitation	No Event	-		
29	4/12/2012	7:52:39	DDB2-D: Blue Pump Cavitation	No Event	-		

1-ERROR

Example 2-JOB File

The 2-JOB file is the Shot Data Log file.

	A	B	C	D	E	F	G	H	I	J	K
1	Job Log										
2	S/N: 06201073										
3	Software Part Number: 16N420										
4	Software Version: 1.01.002										
5	4/23/2012 11:09										
6											
7	Date	Time	Inline Blue RTD Temp	Requested Inline Blue Temp	Hose Blue FTS Temp	Requested Hose Blue Temp	Inline Red RTD Temp	Requested Inline Red Temp	Hose Red FTS Temp	Requested Hose Red Temp	Tank Blu Materia Temp
8	4/11/2012	14:16:52	-		-				-		
9	4/11/2012	14:16:54	-		-				-		
10	4/11/2012	14:16:56	-		-				-		
11	4/11/2012	14:16:58	-		-				-		
12	4/11/2012	14:17:00	-		-				-		
13	4/11/2012	14:17:02	-		-				-		
14	4/11/2012	14:17:04	-		-				-		
15	4/11/2012	14:17:07	-		-				-		
16	4/11/2012	14:17:09	-		-				-		
17	4/11/2012	14:17:11	-		-				-		
18	4/11/2012	14:17:28	-		-				-		

2-JOB

Ready

Example 3-SYSTEM File

The 3-SYSTEM file is the Software Version log file.

	A	B	C	D	E	F	G
1	System Software Log						
2	S/N: 06201073						
3	Software Part Number: 16N420						
4	Software Version: 1.01.002						
5	4/23/2012 11:11						
6							
7	Date	Time	Node:	Software Version			
8	4/23/2012	6:53:49	MCM Application Blue	1.01.108			
9	4/23/2012	6:53:49	MCM Component Blue	1.09.001			
10	4/23/2012	6:53:49	Blue Tank Monitor	1.01.001			
11	4/23/2012	6:53:49	Red Primary Heat	1.05.008			
12	4/23/2012	6:53:49	Blue Hose Heat	1.05.008			
13	4/23/2012	6:53:49	USB Configuration	1.07.001			
14	4/23/2012	6:53:49	Advanced Display	1.01.003			
15	4/23/2012	6:53:50	Blue Primary Heat	1.05.008			
16	4/23/2012	6:53:51	Red Hose Heat	1.05.008			
17	4/23/2012	6:53:54	Red Primary Heat	1.05.008			
18	4/23/2012	6:53:56	Blue Primary Heat	1.05.008			
19							
20							
21							

3-SYSTEM

Transfer System Settings

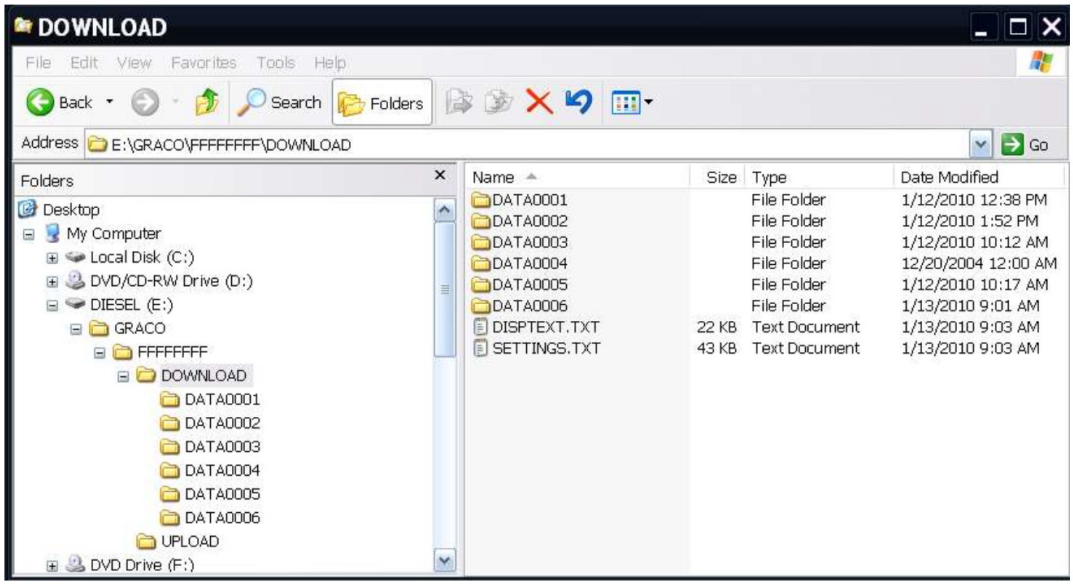

NOTICE

Low-quality USB stick drives may lead to burning out the USB port on the ADM. Use only high-quality USB stick-drives with the ADM USB port.

Use the following process to transfer system settings from one machine to another.

1. Insert a high-quality USB stick-drive into the USB port on the system with the settings to be transferred. Once the download is complete the SETTINGS.TXT file will be located in the “DOWNLOAD” folder.

NOTICE

The user should never attempt to modify the SETTINGS.TXT file in any way. Graco is not responsible for damages caused by an improperly modified setup file.

2. Plug the USB stick-drive into a computer.
3. Navigate to the DOWNLOAD folder.
4. Copy the SETTINGS.TXT file from the DOWNLOAD folder into the UPLOAD folder.
5. Remove the USB stick-drive from the computer and install it into the ADM USB port for the second machine. The software will automatically begin updating.

NOTE: Before the update begins the ADM automatically shuts down the system, aborting any in-progress dispensing. When the software is updating the system a pop-up box will appear to inform the user of the update and the system will lock. Once the update is complete the ADM will tell the user to cycle power to apply the updates. Once this box appears it is safe to remove the drive before cycling power.

6. When the software is done updating, remove the USB stick-drive from the ADM USB port and install in a computer.
7. Navigate to the UPLOAD folder and remove the SETTINGS.TXT file.

NOTE: Immediately after uploading the settings, remove the SETTINGS.TXT file from the UPLOAD folder to prevent accidental loss of data the next time the USB stick-drive is inserted into the ADM USB port. If there is a SETTINGS.TXT file in the UPLOAD folder when the USB stick-drive is inserted into the ADM USB port the software will try to update the ADM.

Update Custom Language

NOTICE

Low-quality USB stick drives may lead to burning out the USB port on the ADM. Use only high-quality USB stick-drives with the ADM USB port.

Use the following process to customize the text on the ADM. The language file DISPTEXT.TXT can be modified in Excel but must be saved as a Unicode Text file with the extension .TXT in order for it to properly import.

1. Insert a high-quality USB stick-drive into the USB port on the system with the settings to be transferred. Once the download is complete the DISPTEXT.TXT file will be located in the “DOWNLOAD” folder.
2. Plug the USB stick-drive into a computer.
3. Navigate to the DOWNLOAD folder.
4. Copy the DISPTEXT.TXT file from the DOWNLOAD to your computer.
5. Use any data processing software such as Excel to edit the DISPTEXT.TXT file. When done editing save the file as the “Unicode Text” format. See **Example DISPTEXT.TXT File** on page 94.
   a. In the first column, locate the string to change.
   b. In the second column of the same row, enter the new string.
   c. Save the file as a Unicode Text file. The name must remain “DISPTEXT.TXT”.
6. Copy the edited DISPTEXT.TXT file into the UPLOAD folder.
7. Remove the USB stick-drive from the computer and install it into the ADM USB port. The software will automatically begin updating.

NOTE: Before the update begins the ADM automatically shuts down the system, aborting any in-progress dispensing. When the software is updating the system a pop-up box will appear to inform the user of the update and the system will lock. Once the update is complete the ADM will tell the user to cycle power to apply the updates. Once this box appears it is safe to remove the drive before cycling power.

8. When the software is done updating, remove the USB stick-drive from the ADM USB port and install in a computer.
9. Navigate to the UPLOAD folder and remove the DISPTEXT.TXT file.

NOTE: Immediately following uploading the language file, remove the DISPTEXT.TXT file from the UPLOAD folder to prevent accidental loss of data the next time the USB stick-drive is inserted into the ADM USB port. If there is a DISPTEXT.TXT file in the UPLOAD folder when the USB stick-drive is inserted into the ADM USB port the software will try to update the ADM.

Example SETTINGS.TXT File

NOTICE

The user should never attempt to modify the SETTINGS.TXT file in any way. Graco is not responsible for damages caused by an improperly modified setup file.

SETTINGS.TXT - Notepad

File Edit Format View Help

```
GMS
0xa0002000      0x00000030
0x80002002      0x00000001
0x80002003      0x00000000
0x80002004      0x00000001
0x80002005      0x00000000
0x80002006      0x00000000
0x80002007      0x00000001
0xa0002008      0x00000000
0xa000200a      0x0000ff05
0x8000200c      0x00000000
0x8000200d      0x00000000
0x8000200e      0x00000000
0x8000200f      0x00000001
0x80002010      0x00000000
0xe0002011      0x000dca1c
0xe0002015      0x000dca1c
0x80002019      0x00000000
0x8000201a      0x00000000
0xe000201b      0x0000ea60
```

Example DISPTEXT.TXT File

	A	B
1	English	Custom
2		
234	Blue MCM Overvoltage	
235	Blue MCM Undervoltage	
236	Blue Motor Encoder Fault	
237	Blue Motor Controller Fault	
238	Blue Motor Low Performance	
239	Blue Motor High Speed	
240	Blue Pump Failed to Move	
241	Invalid Setpoint Request	
242	Small Shot Request	
243	Pressure Imbalance	
244	Pumps Not Defined	
245	Invalid Learn Mode Data Blue	
246	Invalid Weight Cal. Data	
247	Blue Position Sensor Fault	
248	Red Pressure Sensor Fault	
249	Blue Pressure Sensor Fault	
250	Blue Setpoint Not Reached	
251	Blue Setpoint Not Reached	
252	Blue Setpoint Exceeded	

DISPTEXT

Ready 100%

Technical Data

HFR for NVH Foam		
	US	**Metric**
Maximum fluid working pressure	2000 psi	14 MPa, 138 bar
Maximum Fluid Temperature	190°F	88°C
Fluid Inlet Feed Pressure Range	50 psi to 100 psi	345 kPa, 3.4 bar to 0.7 MPa, 7 bar
Fluid Inlet: *Component A (Red)*	1/2 npt(f)	
Fluid Inlet: *Component B (Blue)*	3/4 npt(f)	
Fluid Outlet: *Component A (Red)*	#8 (1/2 in.) JIC (3/4-16 unf), with #5 (5/16 in.) JIC adapter	
Fluid Outlet: *Component B (Blue)*	#10 (5/8 in.) JIC (7/8-14 unf), with #6 (3/8 in.) JIC adapter	
Fluid Circulation Ports	1/4 npsm(m), with plastic tubing, 250 psi (1.75 MPa, 17.5 bar) maximum	
Line Voltage Requirement: *230V / 3 phase Models*	195-264V, 50/60 Hz	
Line Voltage Requirement: *400V / 3 phase Models*	360-440V, 50/60 Hz See **400 V Power Requirements** on page 5	
Amperage Requirement	See **Models** on page 4	
Sound Power	93 dB	
Heater Power (A (Red) and B (Blue) heaters total, no hose)	10 kW full load (12 kW for 1:1 Models Only)	
Hydraulic reservoir capacity	9 gal. (34 liters)	
Recommended hydraulic fluid	Citgo A/W Hydraulic Oil, ISO Grade 46	
Weight: *Units with 10 kW Heaters*	868 lb (394 kg)	
Wetted Part	Aluminum, stainless steel, zinc-plated carbon steel, brass, carbide, chrome, fluoroelastomer, PTFE, ultra-high molecular weight polyethylene, chemically resistant o-rings	
All other brand names or marks are used for identification purposes and are trademarks of their respective owners.		

Motor Control Module Technical Data

Motor Control Module		
	US	**Metric**
Input Specifications:		
Input Line Voltage	0-264 Vac, line-to-line	
Input Line Phasing	Single or Three Phase	
Input Line Frequency	50/60 Hz	
Input Current per Phase	25A (three-phase), 50A (single-phase)	
Maximum Branch Circuit Protection Rating	30A (three-phase), 63A (single-phase)	
Short Circuit Current Rating	5 kA	
Output Specifications:		
Output Line Voltage	0-264 Vac	
Output Line Phasing	Three Phase	
Output Current	0-30A	
Output Overload	200% for 0.2 seconds	
DC Power Supply	24 Vdc, Class 2, Graco-provided power supply	
Enclosure	Type 1	
Max Ambient Temperature	50°C (122°F)	
Overtemperature protection is provided to protect from motor overload. *Current limit, set via the software, is provided as a secondary protection from motor overload.* *All installations and wiring must comply with NEC and local electrical codes.*		

Dimensions

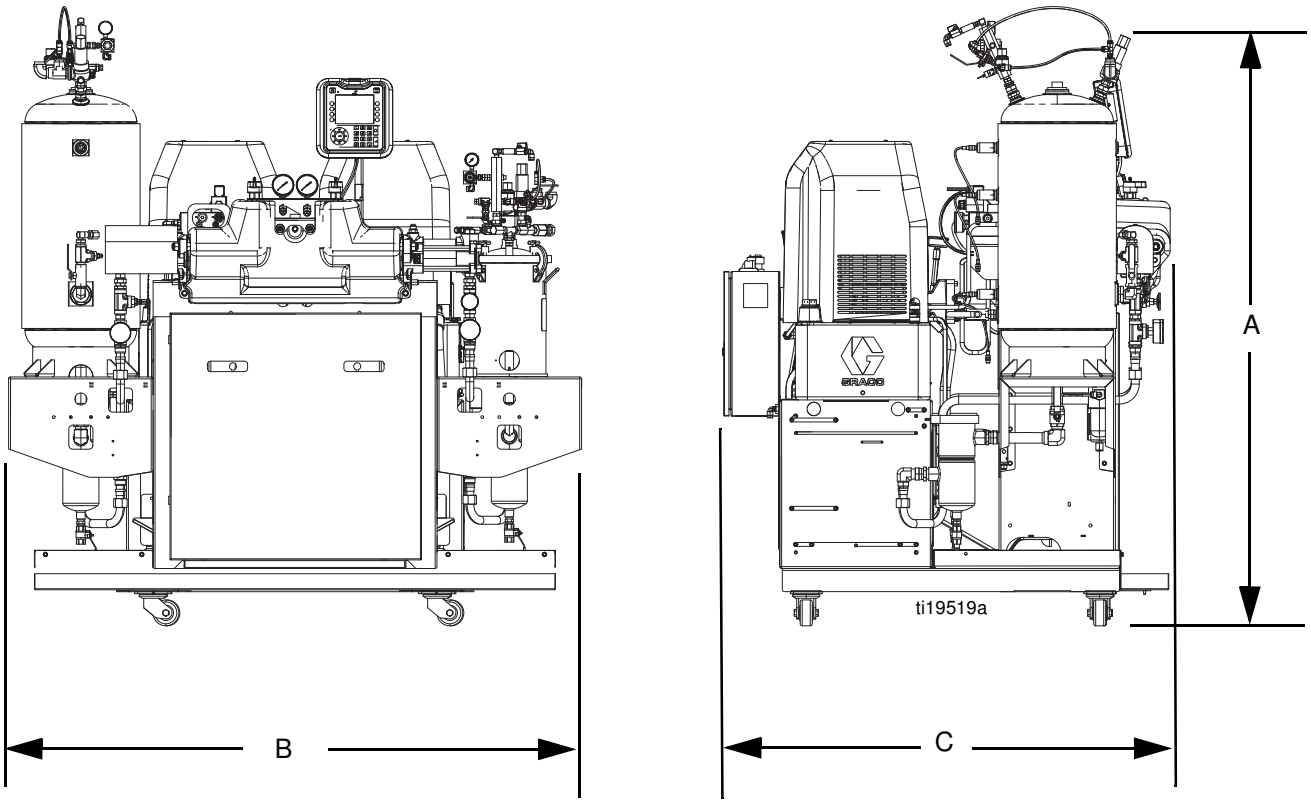

Dimensions	
A (Height)	76 in. (193 cm)
B (Width)	72 in. (183 cm)
C (Length)	58 in. (147 cm)

Graco Standard Warranty

Graco warrants all equipment referenced in this document which is manufactured by Graco and bearing its name to be free from defects in material and workmanship on the date of sale to the original purchaser for use. With the exception of any special, extended, or limited warranty published by Graco, Graco will, for a period of twelve months from the date of sale, repair or replace any part of the equipment determined by Graco to be defective. This warranty applies only when the equipment is installed, operated and maintained in accordance with Graco's written recommendations.

This warranty does not cover, and Graco shall not be liable for general wear and tear, or any malfunction, damage or wear caused by faulty installation, misapplication, abrasion, corrosion, inadequate or improper maintenance, negligence, accident, tampering, or substitution of non-Graco component parts. Nor shall Graco be liable for malfunction, damage or wear caused by the incompatibility of Graco equipment with structures, accessories, equipment or materials not supplied by Graco, or the improper design, manufacture, installation, operation or maintenance of structures, accessories, equipment or materials not supplied by Graco.

This warranty is conditioned upon the prepaid return of the equipment claimed to be defective to an authorized Graco distributor for verification of the claimed defect. If the claimed defect is verified, Graco will repair or replace free of charge any defective parts. The equipment will be returned to the original purchaser transportation prepaid. If inspection of the equipment does not disclose any defect in material or workmanship, repairs will be made at a reasonable charge, which charges may include the costs of parts, labor, and transportation.

THIS WARRANTY IS EXCLUSIVE, AND IS IN LIEU OF ANY OTHER WARRANTIES, EXPRESS OR IMPLIED, INCLUDING BUT NOT LIMITED TO WARRANTY OF MERCHANTABILITY OR WARRANTY OF FITNESS FOR A PARTICULAR PURPOSE.

Graco's sole obligation and buyer's sole remedy for any breach of warranty shall be as set forth above. The buyer agrees that no other remedy (including, but not limited to, incidental or consequential damages for lost profits, lost sales, injury to person or property, or any other incidental or consequential loss) shall be available. Any action for breach of warranty must be brought within two (2) years of the date of sale.

GRACO MAKES NO WARRANTY, AND DISCLAIMS ALL IMPLIED WARRANTIES OF MERCHANTABILITY AND FITNESS FOR A PARTICULAR PURPOSE, IN CONNECTION WITH ACCESSORIES, EQUIPMENT, MATERIALS OR COMPONENTS SOLD BUT NOT MANUFACTURED BY GRACO. These items sold, but not manufactured by Graco (such as electric motors, switches, hose, etc.), are subject to the warranty, if any, of their manufacturer. Graco will provide purchaser with reasonable assistance in making any claim for breach of these warranties.

In no event will Graco be liable for indirect, incidental, special or consequential damages resulting from Graco supplying equipment hereunder, or the furnishing, performance, or use of any products or other goods sold hereto, whether due to a breach of contract, breach of warranty, the negligence of Graco, or otherwise.

FOR GRACO CANADA CUSTOMERS
The Parties acknowledge that they have required that the present document, as well as all documents, notices and legal proceedings entered into, given or instituted pursuant hereto or relating directly or indirectly hereto, be drawn up in English. Les parties reconnaissent avoir convenu que la rédaction du présente document sera en Anglais, ainsi que tous documents, avis et procédures judiciaires exécutés, donnés ou intentés, à la suite de ou en rapport, directement ou indirectement, avec les procédures concernées.

Graco Information

For the latest information about Graco products, visit www.graco.com.

TO PLACE AN ORDER, contact your Graco distributor or call to identify the nearest distributor.
Toll Free: 1-800-746-1334 **or Fax:** 330-966-3006

All written and visual data contained in this document reflects the latest product information available at the time of publication. Graco reserves the right to make changes at any time without notice.

For patent information, see www.graco.com/patents.

Original instructions. This manual contains English. MM 3A2797

Graco Headquarters: Minneapolis
International Offices: Belgium, China, Japan, Korea

GRACO INC. AND SUBSIDIARIES • P.O. BOX 1441 • MINNEAPOLIS MN 55440-1441 • USA

Copyright 2012, Graco Inc. All Graco manufacturing locations are registered to ISO 9001.
www.graco.com
Revised November 2014